NOTE: COORDINATE CONSTRUCTION ON & ARROUND EXHAUST HOODS W/ LOCAL AUTHORITIES (SHALL COMPLY W/ NFPA 96 MINIMUM)

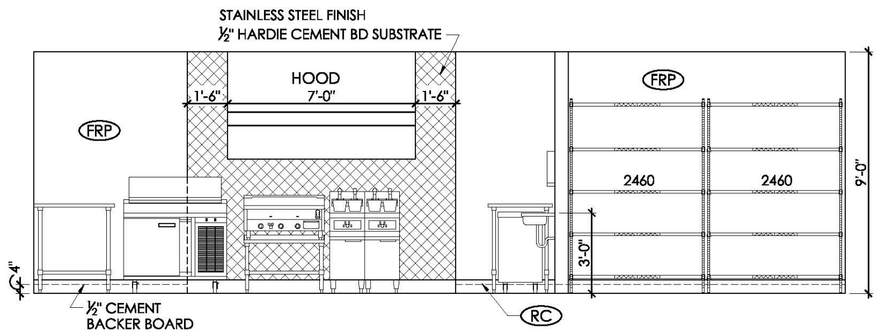

1 A114 KITCHEN ELEVATION 1/A100
1/4" = 1'-0"

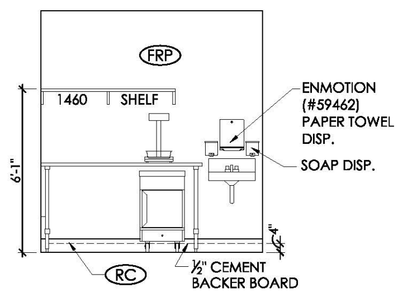

2 A114 KITCHEN ELEVATION 1/A100
1/4" = 1'-0"

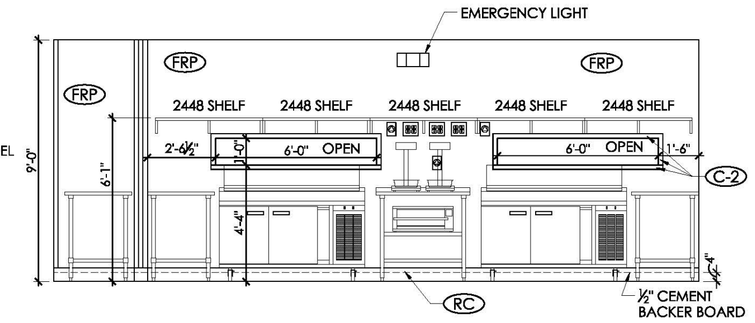

3 A114 KITCHEN ELEVATION 1/A100
1/4" = 1'-0"

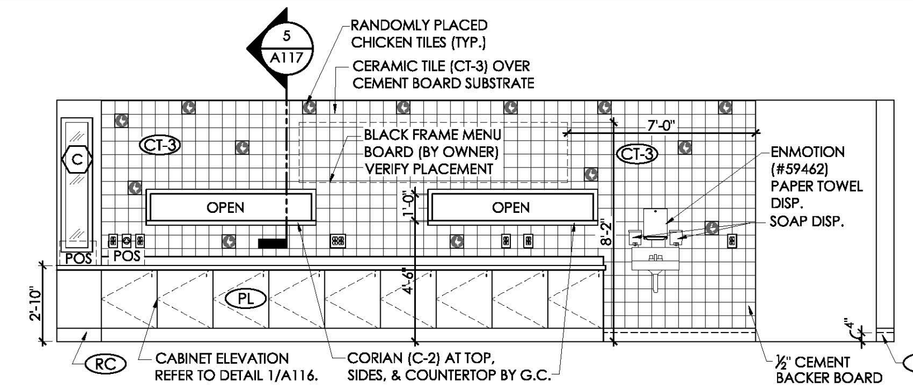

4 A114 REAR SERVING COUNTER ELEVATION 1/A100
1/4" = 1'-0"

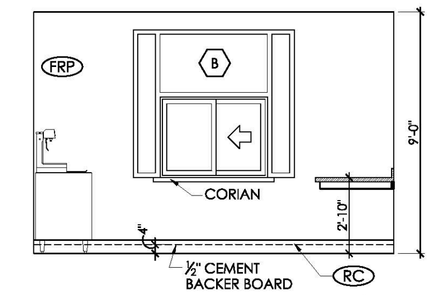

5 A114 DRIVE THRU ELEVATION 1/A100
1/4" = 1'-0"

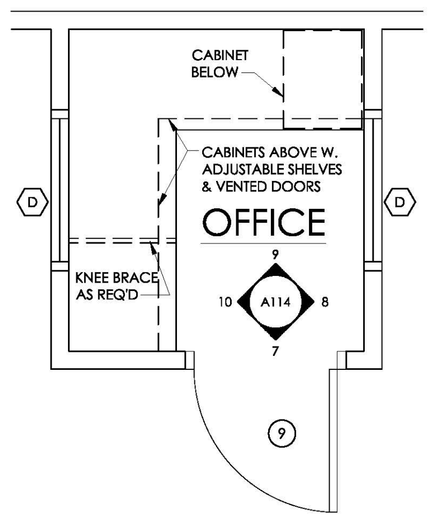

6 A114 ENLARGED OFFICE PLAN 1/A100
1/2" = 1'-0"

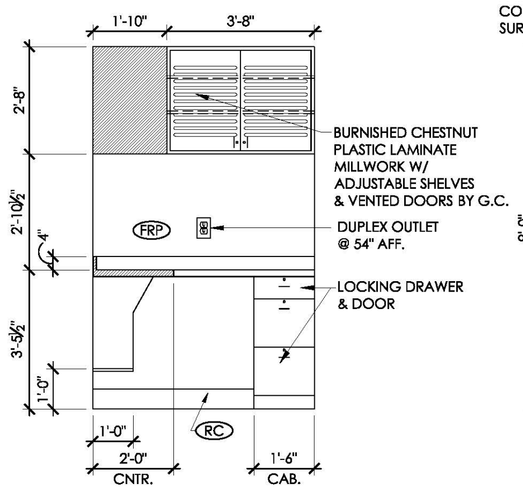

7 A114 OFFICE ELEVATION 1/A100
3/8" = 1'-0"

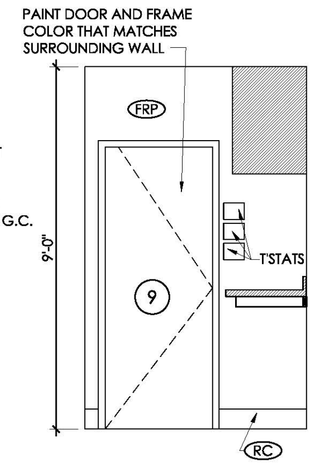

8 A114 OFFICE ELEVATION 1/A100
3/8" = 1'-0"

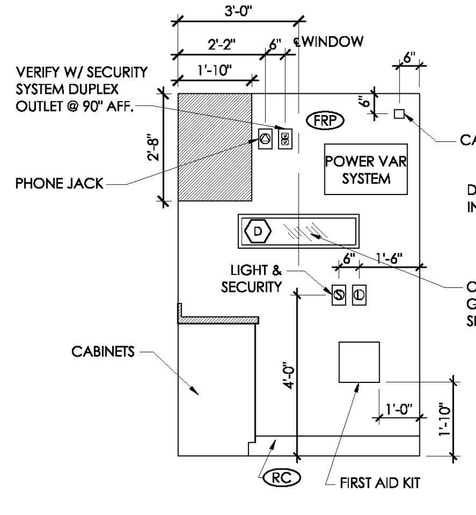

9 A114 OFFICE ELEVATION 1/A100
3/8" = 1'-0"

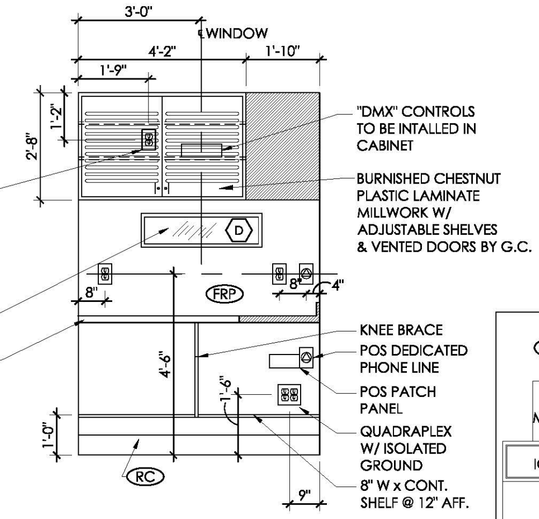

10 A114 OFFICE ELEVATION 1/A100
3/8" = 1'-0"

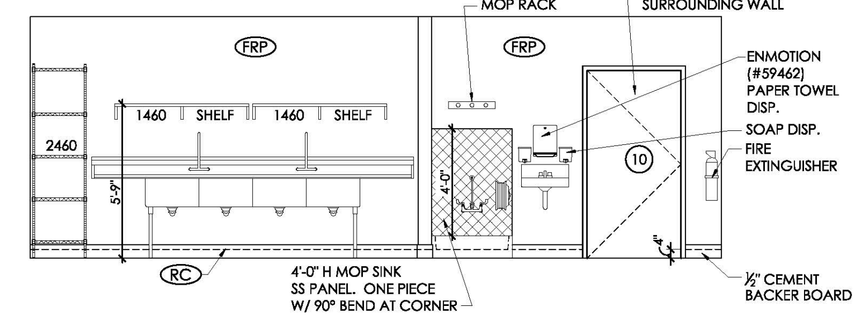

11 A114 DISHWASHING ELEVATION 1/A100
1/4" = 1'-0"

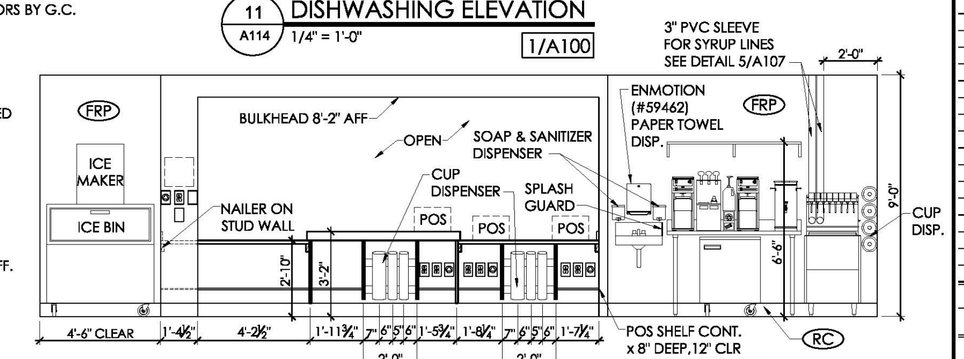

37 A114 CUSTOMER SERVICE ELEVATION 1/A100
1/4" = 1'-0"

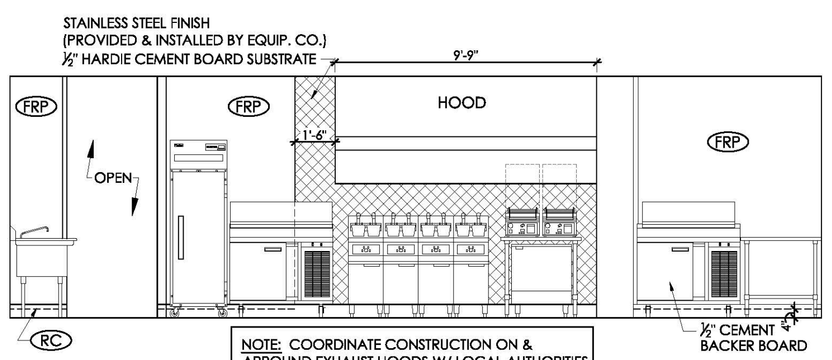

NOTE: COORDINATE CONSTRUCTION ON & ARROUND EXHAUST HOODS W/ LOCAL AUTHORITIES (SHALL COMPLY W/ NFPA 96 MINIMUM)

12 A114 FOOD PREP ELEVATION 1/A100
1/4" = 1'-0"

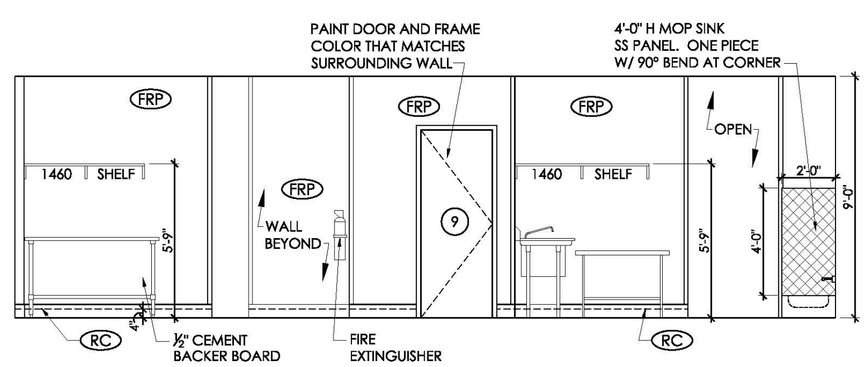

13 A114 HALL ELEVATION 1/A100
1/4" = 1'-0"

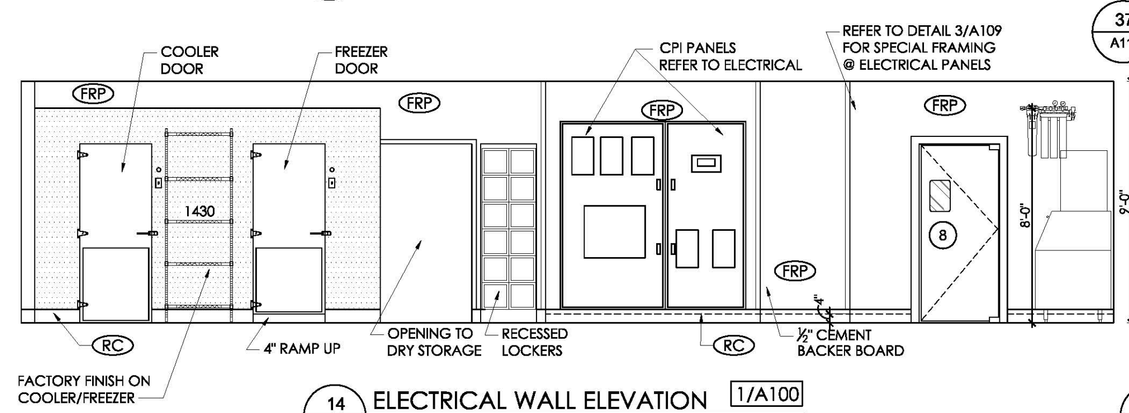

14 A114 ELECTRICAL WALL ELEVATION 1/A100
1/4" = 1'-0"

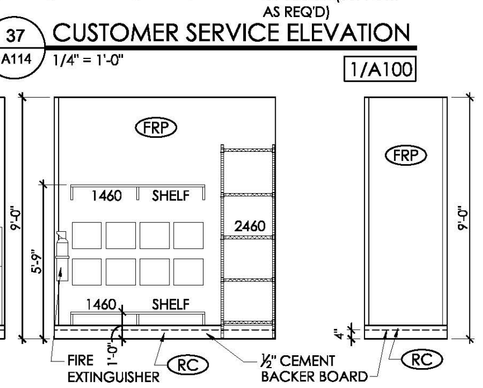

15 A114 DISHWASHING ELEV. 1/A100
1/4" = 1'-0"

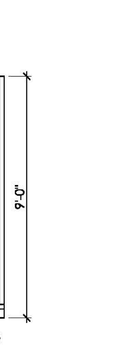

16 A114 HALL ELEV. 1/A100
1/4" = 1'-0"

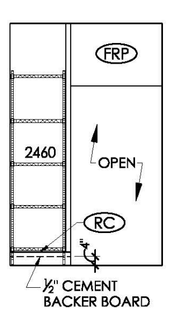

17 A114 DRY STOR. ELEV. 1/A100
1/4" = 1'-0"

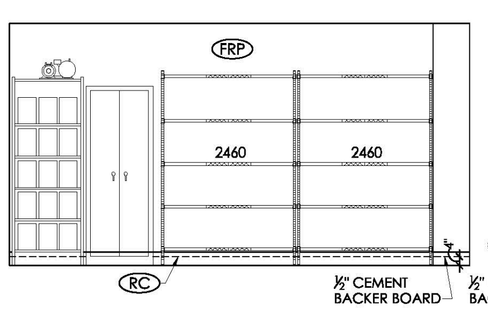

18 A114 DRY STOR. ELEV. 1/A100
1/4" = 1'-0"

19 A114 DRY STOR. ELEV. 1/A100
1/4" = 1'-0"

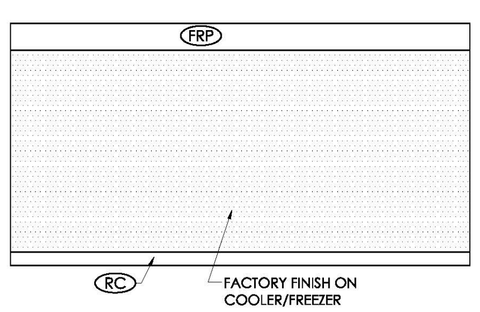

20 A114 DRY STOR. ELEV. 1/A100
1/4" = 1'-0"

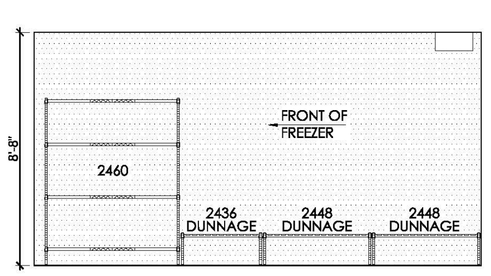

21 A114 FREEZER ELEV. 1/A100
1/4" = 1'-0"

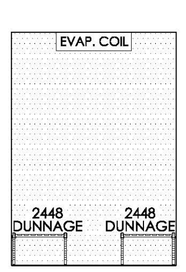

22 A114 FREEZER ELEV. 1/A100
1/4" = 1'-0"

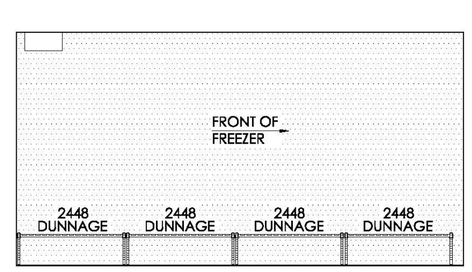

23 A114 FREEZER ELEV. 1/A100
1/4" = 1'-0"

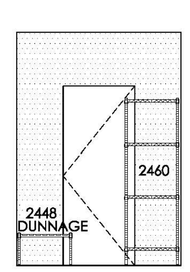

24 A114 FREEZER ELEV. 1/A100
1/4" = 1'-0"

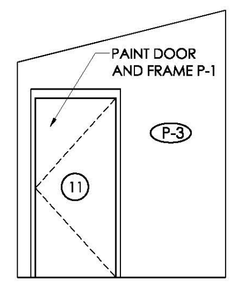

33 A114 STORAGE 117 ELEV. 1/A100
1/4" = 1'-0"

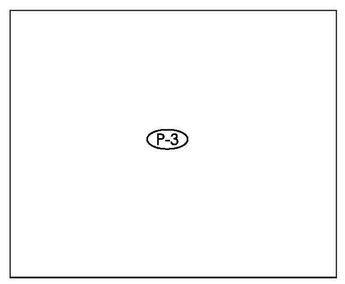

34 A114 STORAGE 117 ELEV. 1/A100
1/4" = 1'-0"

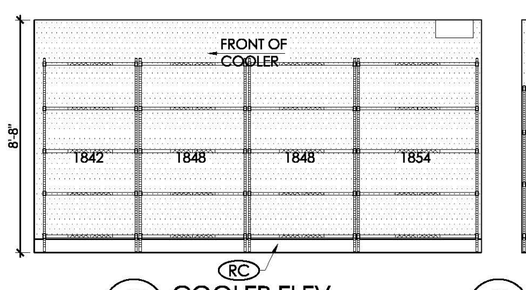

25 A114 COOLER ELEV. 1/A100
1/4" = 1'-0"

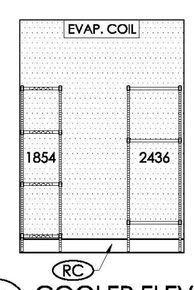

26 A114 COOLER ELEV. 1/A100
1/4" = 1'-0"

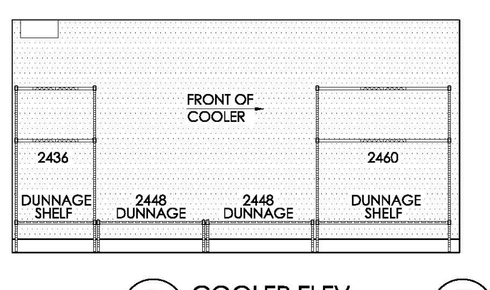

27 A114 COOLER ELEV. 1/A100
1/4" = 1'-0"

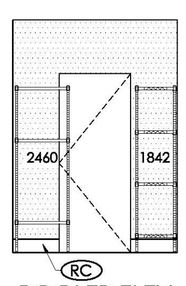

28 A114 COOLER ELEV. 1/A100
1/4" = 1'-0"

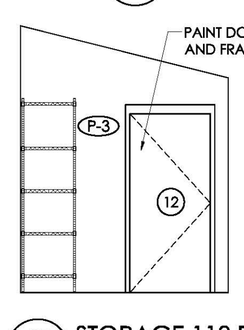

29 A114 STORAGE 118 ELEV. 1/A100
1/4" = 1'-0"

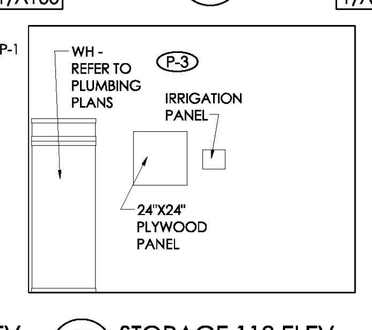

30 A114 STORAGE 118 ELEV. 1/A100
1/4" = 1'-0"

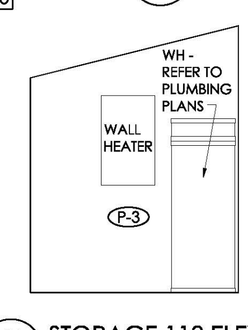

31 A114 STORAGE 118 ELEV. 1/A100
1/4" = 1'-0"

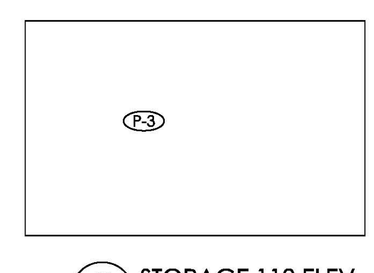

32 A114 STORAGE 118 ELEV. 1/A100
1/4" = 1'-0"

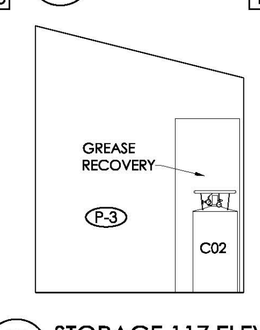

35 A114 STORAGE 117 ELEV. 1/A100
1/4" = 1'-0"

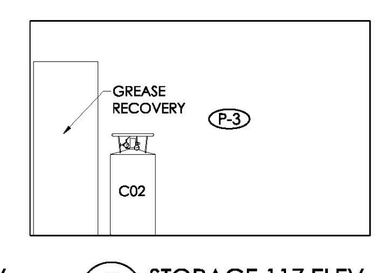

36 A114 STORAGE 117 ELEV. 1/A100
1/4" = 1'-0"

THESE PLANS ARE THE PROPERTY OF MRP DESIGN GROUP, INC. AND ARE SUBJECT TO FEDERAL COPYRIGHT LAWS. ANY USE OF SAME WITHOUT THE EXPRESS WRITTEN PERMISSION OF MRP DESIGN GROUP, INC. IS STRICTLY PROHIBITED

MRP DESIGN GROUP
3450 Acworth Due West Road
Building 100, Suite 120
Kennesaw, Georgia 30144
P. 678-574-8762
F. 770-917-9470
www.mrpdesign.com

RELEASED FOR CONSTRUCTION

ISSUES/REVISIONS

DATE	DESCRIPTION
4/9/12	PERMIT SET

DRAWN BY: SAB
CHK'D BY: DS
SEAL

PROJECT NAME & ADDRESS

ZAXBY'S®
4210 UNIVERSITY BLVD., SOUTH
JACKSONVILLE, FL 32207

SHEET TITLE

INTERIOR ELEVATIONS

PROJECT NO: 11075

A114

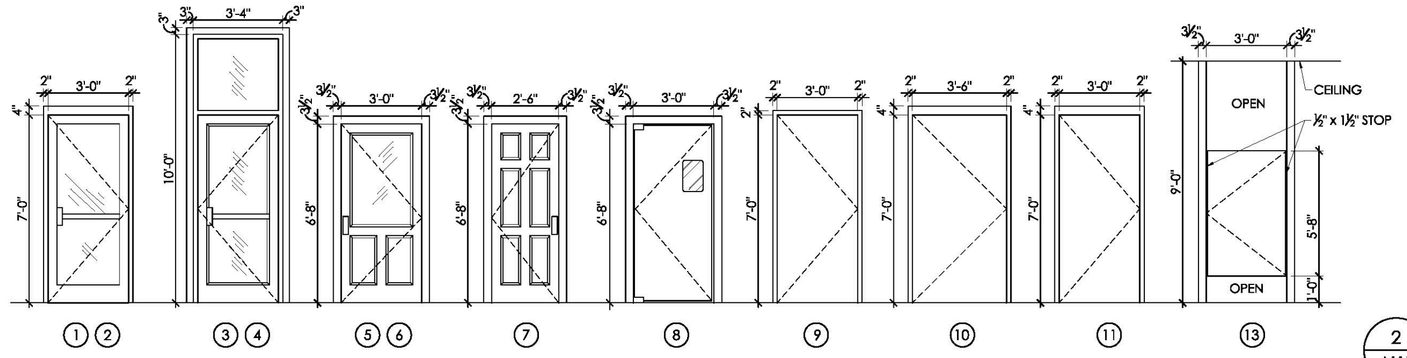

1 DOOR ELEVATIONS
A115 1/4" = 1'0" VIEW FROM INTERIOR

DOOR SCHEDULE

DOOR NO.	DOOR SIZE	MATERIAL	FINISH	FIRE RATING	DETAIL HEAD	DETAIL JAMB	DETAIL THRESH	HDWR GROUP	FRAME	REMARKS
1	3'-0" x 7'-0"	ALUM.	BLACK		8A115	9/A115	21/A115	1	ALUM.	FRAME AND THRESHOLD PER MANUF. THRESHOLD TO CONFORM WITH ADA.
2	3'-0" x 7'-0"	ALUM.	BLACK		8A115	9/A115	21/A115	1	ALUM.	FRAME AND THRESHOLD PER MANUF. THRESHOLD TO CONFORM WITH ADA.
3	3'-0" x 7'-0"	ALUM.	BLACK		12/A115	13/A115	10/A115	2	ALUM.	TEMPERED SINGLE PANE W/ TRANSOM
4	3'-0" x 7'-0"	ALUM.	BLACK		12/A115	13/A115	10/A115	2	ALUM.	TEMPERED SINGLE PANE W/ TRANSOM
5	3'-0" x 6'-8"	S.C. WOOD	STAIN		2/A115	3/A115	10/A115	3	WOOD	BIRCH W/TEMPERED, ACID ETCHED GLASS PROVIDE H/C MEN SIGNAGE. SEE DET. 4/A112.
6	3'-0" x 6'-8"	S.C. WOOD	STAIN		2/A115	3/A115	10/A115	3	WOOD	BIRCH W/TEMPERED, ACID ETCHED GLASS PROVIDE H/C WOMEN SIGNAGE. SEE DET. 4/A112.
7	2'-6" x 6'-8"	S.C. WOOD	STAIN		2/A115	3/A115	10/A115	4	WOOD	BIRCH
8	3'-0" x 6'-8"	3/4" WOOD & LAM.	PREFIN.		2/A115	3/A115	10/A115	5	WOOD	ELIASON DOOR (SCP - COLOR #7759-58) W/ 9" x 14" WINDOW (REGULAR DUTY)
9	3'-0" x 7'-0"	H.M.	PAINT		4/A115	5/A115	10/A115	6	H.M.	PAINT DOOR & FRAME TO MATCH SURRONDING FINISH, BOTH SIDES.
10	3'-6" x 7'-0"	H.M.I.	PAINT		6/A115	23/A115	11/A115	7	H.M.	PAINT INT. SIDE OF DOOR & FRAME TO MATCH SURRONDING FINISH, PAINT EXT. DOOR & FRAME P-3
11	3'-0" x 7'-0"	H.M.I.	PAINT		22/A115	23/A115	21/A115	8	H.M.	PAINT INT. SIDE OF DOOR & FRAME P-1. PAINT EXT. DOOR & FRAME P-3
12	3'-0" x 7'-0"	H.M.I.	PAINT		22/A115	23/A115	21/A115	8	H.M.	PAINT INT. SIDE OF DOOR & FRAME P-1. PAINT EXT. DOOR & FRAME P-3
13	3'-0" x 5'-8"	S.C. WOOD	STAIN		-	3/A115	10/A115	9	WOOD	BIRCH (RESTROOM HC STALL DOOR)
14	GATE @ CANWASH							10		REFER TO DETAIL 4/S102

* ALL DELIVERIES TO THE WORK SITE SHALL BE APPROVED AND ACCEPTED BY THE GENERAL CONTRACTOR.

* ALL FINISHES SHALL BE APPROVED BY THE OWNER.

* DOOR SPECIFICATIONS TO BE FOLLOWED UNLESS ` ALTERNATES ARE APPROVED BY THE OWNER.

* ANY DEVIATION FROM THESE SPECIFICATIONS SHALL BE PRESENTED TO AND APPROVED BY THE OWNER PRIOR TO CONSTRUCTION OR INSTALLATION. ANY DEVIATION IS SUBJECT TO REFUSAL, AND REPLACEMENT WILL BE ORDERED OR CREDIT WILL BE GIVEN TO THE COST OF THE CONSTRUCTION.

* ALL GLASS WITHIN 24" OF ANY DOOR AND WITHIN 18" FROM FLOOR SHALL BE TEMPERED SAFETY GLASS.

* ALL DOORS USED IN THE MEANS OF EGRESS (EXITS) SHALL BE SIDE HINGED AND SWING IN THE DIRECTION OF EGRESS. IF ANY LOCKING OR LATCHING DEVICE IS TO BE PROVIDED, ONLY NFPA APPROVED HARDWARE MAY BE USED.

* EXIT DOORS SHALL NOT BE SUBJECT TO THE USE OF A KEY FOR OPERATION FROM THE INSIDE OF THE BUILDING (NFPA 101 5-2.1.5.1) DURING HOURS THAT THE BUILDING IS OCCUPIED.

* DOORS WHICH ARE REQUIRED TO BE HANDICAP ACCESSIBLE, SHALL MEET A.D.A. SECTION 4.1 AND 4.13 REQUIREMENTS.

* EVERY DOOR INSIDE AND OUTSIDE OF THE BUILDING SHALL BE PROVIDED WITH HANDICAP HARDWARE (LEVERS, PANIC HARDWARE, ETC.).

* HARDWARE FOR HANDICAP ACCESSIBLE PASSAGE SHALL BE MOUNTED BETWEEN 36" AND 48" ABOVE FINISHED FLOOR.

* THE FLOOR ON BOTH SIDES OF A DOOR SHALL BE LEVEL AND AT THE SAME ELEVATION. FOR A DISTANCE AT LEAST EQUAL TO THE WIDTH OF THE WIDEST SINGLE DOOR (NFPA 101 5-2.1.3.3).

* ANY DOOR WITH A CLOSER SHALL HAVE ITS SWEEP PERIOD ADJUSTED SO THAT FROM AN OPEN POSITION OF 70 DEGREES, THE DOOR WILL TAKE AT LEASE 3 SECONDS TO MOVE TO A POINT 3 INCHES SEPARATING THE LATCH AND THE LEADING EDGE OF THE DOOR.

* A DOOR OPENING FORCE FOR PUSHING OR PULLING TO OPEN A DOOR WITH CLOSER SHALL BE AS FOLLOWS: INTERIOR DOORS: 5 POUNDS FORCE EXTERIOR DOORS: 8 POUNDS FORCE

* DOORS LEADING TO THE EXTERIOR OF THE BUILDING SHALL HAVE WEATHER STRIPPING APPLIED. WEATHER STRIPPING AT SILLS MAY BE VINYL GASKET OR NEOPRENE BRUSHES ATTACHED TO THE BOTTOM EDGE OF THE DOOR.. WEATHER STRIPPING AT STYLES, USE NEOPRENE APPLIED TO THE DOOR EDGE.

GROUP 1
KAWNEER 350 3'X7' #29 BLACK FINISH
KAWNEER 1686 CONCEALED ROD PANIC EXIT DEVICE
1 ADAMSRITE MORTISE CYLINDER #20-013 x 626
C.O.-9 PULL
7/8" BOTTOM RAIL
LCN 4041 DEL CLOSER BLACK FINISH OR EQUAL
4" THRESHOLD #270A X 36" WIDE
BOTTOM DOOR SWEEP 222AV X 36
KAWNEER 451 TRI-FAB FRAME
5/16" GRAY IMPACT GLAZING
} ALL HARDWARE EXCEPT CYLINDER BY STOREFRONT SUPPLIER CYLINDER BY HARDWARE SUPPLIER

GROUP 2
KAWNEER 350 (3' X 7') #29 BLACK FINISH
NO LOCKING
NO THRESHOLD
1½ PR OFFSET PIVOTS
CO-9/COPII PUSH/PULL
7½" BOTTOM RAIL
LCN 4041 DEL FACTORY CLOSER BLACK FINISH OR EQUAL
KAWNEER 450 TRI-FAB FRAMING W/TRANSOM
¼" CLEAR TEMPERED GLAZING
} ALL HARDWARE BY STOREFRONT SUPPLIER

GROUP 3
1 1/2 PR. BUTTS: FBB179 US26D 4 1/2 X 4 1/2
1 PUSH PLATE & PULL HANDLE
1 CLOSER: 1461 X TB X ALUM
1 KICKSTAND HOLD OPEN DEVICE
3 SILENCERS 608

GROUP 4
1 1/2 PR. BUTTS: FBB179 US26D 4 1/2 X 4 1/2 X NRP
1 LOCKSET: AL80PD X 10-025 X US26D
1 KICKSTAND HOLD OPEN DEVICE
3 SILENCERS 608

GROUP 5
STANDARD MFG HARDWARE (HEAVY DUTY DOOR)

GROUP 6
1 1/2 PR. BUTTS: FBB179 US26D 4 1/2 X 4 1/2 X NRP
1 LOCKSET: AL50PD X 10-025 X US26D
3 SILENCERS 608

GROUP 7
1 CONTINUOUS STAINLESS STEEL PIANO HINGE
1 LOCKSET: PANIC HARDWARE *
1 CLOSER: 1461 X TB X ALUM
1 KICK PLATES: 8 X 34 US32D
1 STOP: 409 X 626
3 SILENCERS: 608
1 THRESHOLD: 803Vx42" ALUM
1 SET WEATHERSTRIPPING 160Vx21'-0"
1 RIM CYLINDER 20-022 X 626

GROUP 8
1 1/2 PR. BUTTS: FBB179 US26D 4 1/2 X 4 1/2
1 LOCKSET: AL80PD X 10-025 X US26D
1 CLOSER: 1461 X TB X ALUM
3 SILENCERS: 608
1 THRESHOLD: 803Vx36" ALUM
1 SET WEATHERSTRIPPING 160Vx21'-0"

GROUP 9
1 1/2 PR. BUTTS: FBB179 US26D 4 1/2 x 4 1/2 SELF CLOSING HINGES
1 LOCKSET: AL40S X 10-025 X US26D

GROUP 10
(@ CANWASH GATE)
1 - PANIC HARDWARE LOCKSET*

*PANIC HARDWARE TO HAVE ALARM FEATURE

GENERAL DOOR NOTES

1. DOOR HARDWARE SHALL HAVE LEVER OPERATED OR PUSH TYPE MECHANISMS
2. DOORS IN EXITS SHALL NOT BE SUBJECT TO THE USE OF ANY KEY FOR OPERATION FROM THE INSIDE OF THE BUILDING
3. ALL DOOR EDGES ARE TO BE PAINTED TO MATCH DOOR FACE (U.N.O.)

ACCEPTED HDW. MANUFACTURERS
(COMMERCIAL GRADE)

ARROW	SARGENT
CORBIN	SCHLAGE
RUSSWIN	YALE

HARDWARE FINISH
US26D: SATIN CHROMIUM-PLATED

MANUFACTURERS

LOCKSETS:	SCHLAGE
CLOSERS:	LCN
BUTT HINGES:	STANLEY
PULLS-PROTECTION PLATES:	ROCKWOOD
STOPS-SILENCERS:	ROCKWOOD
THRESHOLDS & WEATHERSTRIPPING:	NATIONAL GUARD & PEMKO
PANIC DEVICES	DETEX
STORM CHAIN	IVES
BALL CATCH	IVES
TOP & BOTTOM BOLTS	IVES

KEYING
LOCKSETS ARE TO BE KEYED DIFFERENTLY & MASTER KEYED AS DIRECTED BY OWNER. THREE (3) MASTER KEYS WILL BE PROVIDED.

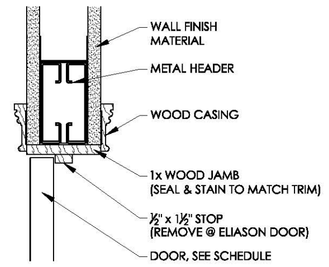

2 INTERIOR HEAD DETAIL - WOOD FRAME
A115 NTS

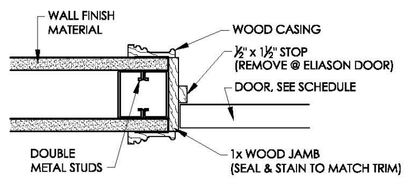

3 INTERIOR JAMB DETAIL - WOOD FRAME
A115 NTS

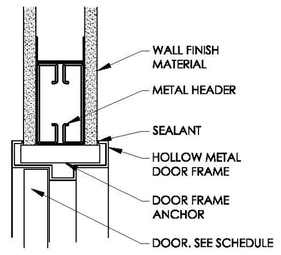

4 INTERIOR HEAD DETAIL - H.M. FRAME
A115 NTS

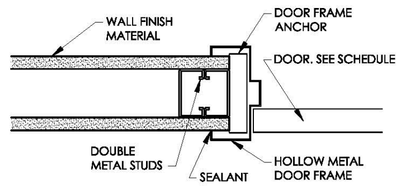

5 INTERIOR JAMB DETAIL - H.M. FRAME
A115 NTS

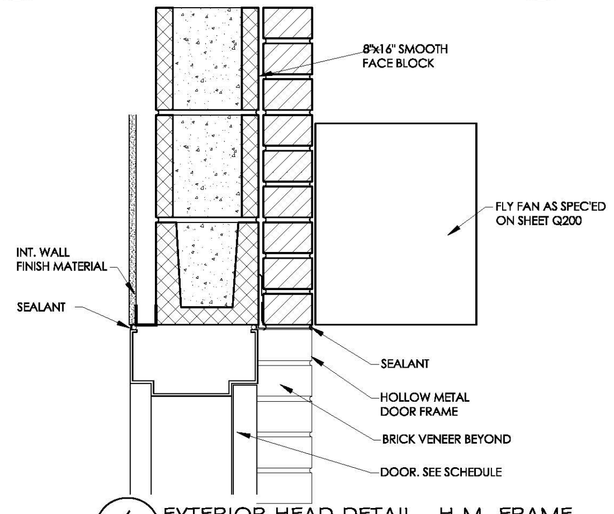

6 EXTERIOR HEAD DETAIL - H.M. FRAME
A115 NTS

7 DETAIL NOT USED
A115 NTS

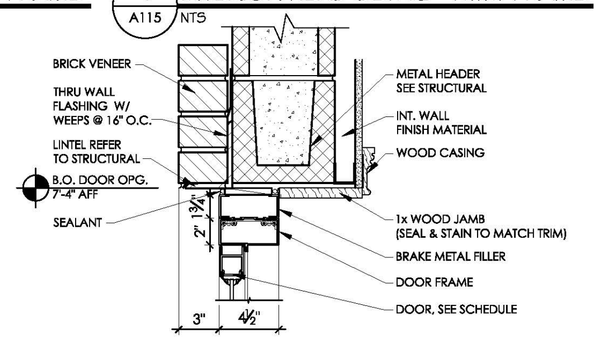

8 EXTERIOR DOOR HEAD DETAIL
A115 NTS

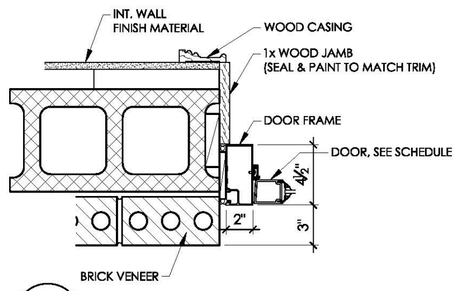

9 EXTERIOR DOOR JAMB DETAIL
A115 NTS

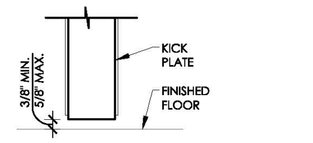

10 INTERIOR THRESHOLD DETAIL
A115 NTS

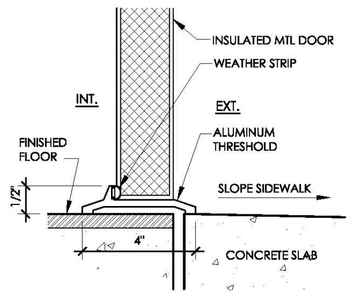

11 EXTERIOR THRESHOLD DETAIL
A115 NTS

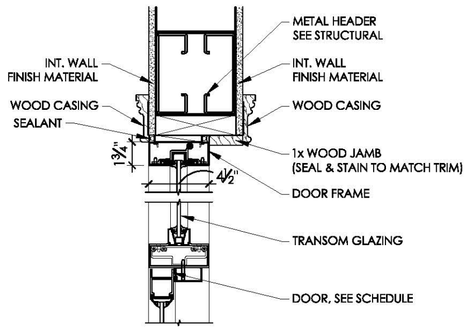

12 VESTIBULE DOOR HEAD DETAIL
A115 NTS

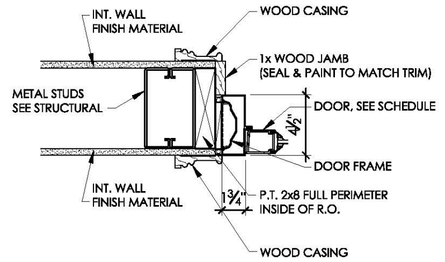

13 VESTIBULE DOOR JAMB DETAIL
A115 NTS

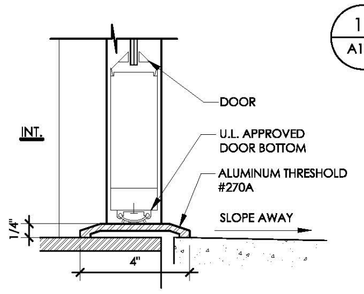

21 THRESHOLD DETAIL
A115 NTS

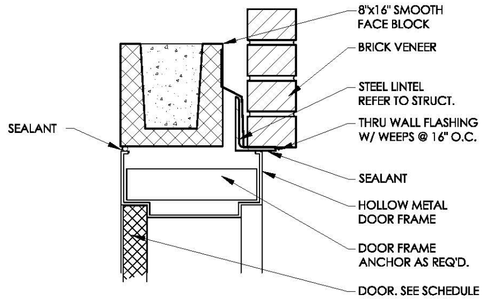

22 EXTERIOR HEAD DETAIL - H.M. FRAME
A115 NTS

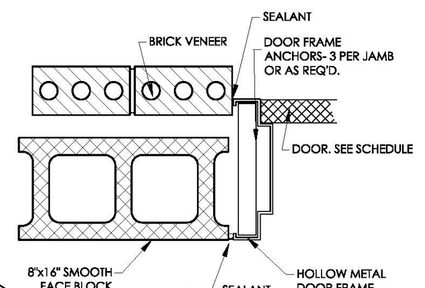

23 EXTERIOR JAMB DETAIL - H.M. FRAME
A115 NTS

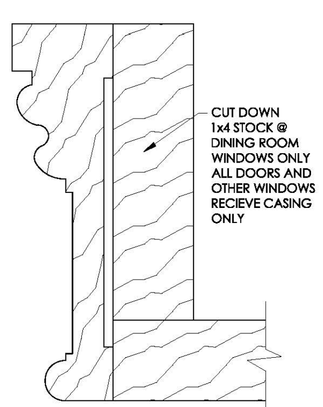

14 CASING DETAIL (RB-3) OVER 1x4 STOCK
A115 SCALE: FULL (T-3)
DINING WINDOWS
DRIVE-THRU WINDOWS
OFFICE WINDOWS & LIGHT
RESTROOMS DOORS

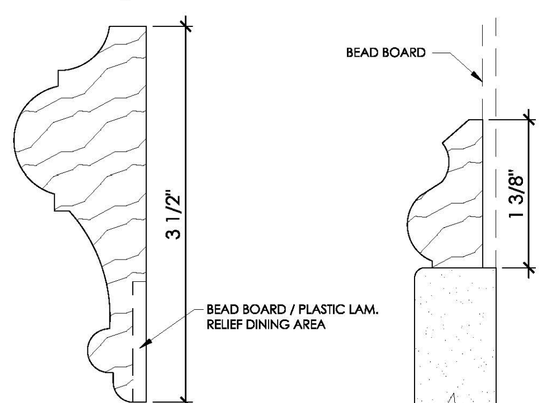

15 CHAIR RAIL (RB-8807)
A115 SCALE: FULL (T-2)
DINING AREA
CUSTOMER SERVICE

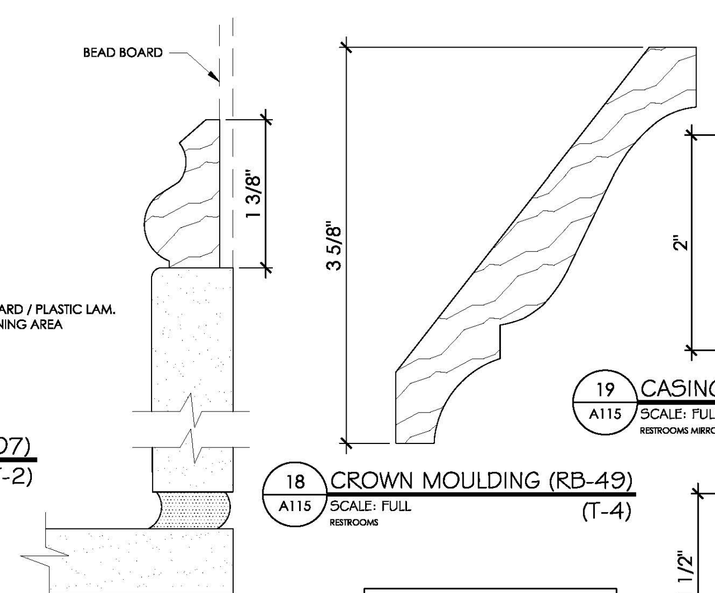

18 CROWN MOULDING (RB-49)
A115 SCALE: FULL (T-4)
RESTROOMS

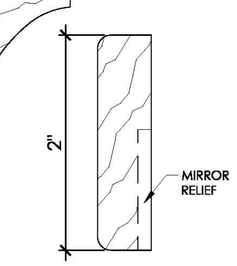

19 CASING (RB-8905)
A115 SCALE: FULL (T-6)
RESTROOMS MIRRORS

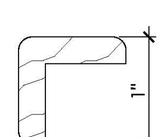

16 CORNER GUARD (RB-205)
A115 SCALE: FULL (T-5)
DINING AREA COLUMNS

17 BASE CAP (RB-163) OVER CERAMIC CUT TILE BASE (CTB)
A115 SCALE: FULL (T-1)
DINING ROOM & CUSTOMER SERVICE

'RB' MOLDING SHOWN IS MADE BY
RANDALL BROTHERS, INC.
665 MARIETTA ST NW
ATLANTA, GA 30371
404-892-6666

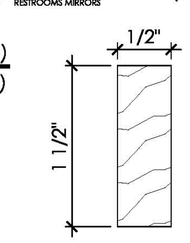

20 STOP (RB-32)
A115 SCALE: FULL

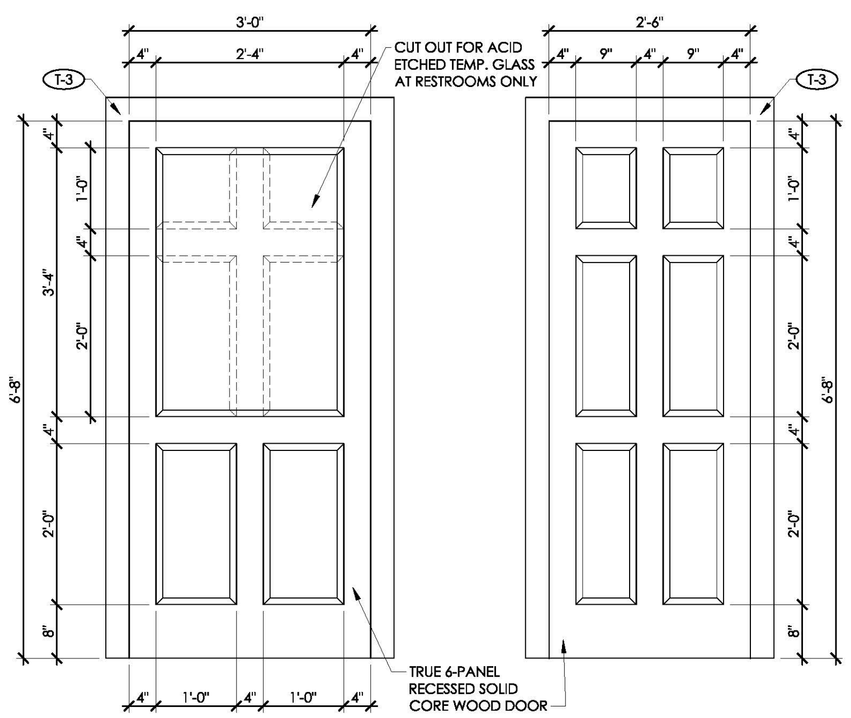

24 6-PANEL DOOR ELEVATIONS
A115 3/4"= 1'-0"

THESE PLANS ARE THE PROPERTY OF MRP DESIGN GROUP, INC. AND ARE SUBJECT TO FEDERAL COPYRIGHT LAWS. ANY USE OF SAME WITHOUT THE EXPRESS WRITTEN PERMISSION OF MRP DESIGN GROUP, INC. IS STRICTLY PROHIBITED

MRP DESIGN GROUP
3450 Acworth Due West Road
Building 100, Suite 120
Kennesaw, Georgia 30144
P. 678-574-8762
F. 770-917-9470
www.mrpdesign.com

RELEASED FOR CONSTRUCTION

ISSUES/REVISIONS

DATE	DESCRIPTION
4/6/12	PERMIT SET

DRAWN BY: SAB
CHK'D BY: DS
SEAL

PROJECT NAME & ADDRESS
ZAXBY'S®
4210 UNIVERSITY BLVD., SOUTH
JACKSONVILLE, FL 32207

SHEET TITLE
DOOR SCHEDULE & DETAILS

PROJECT NO: 11075

A115

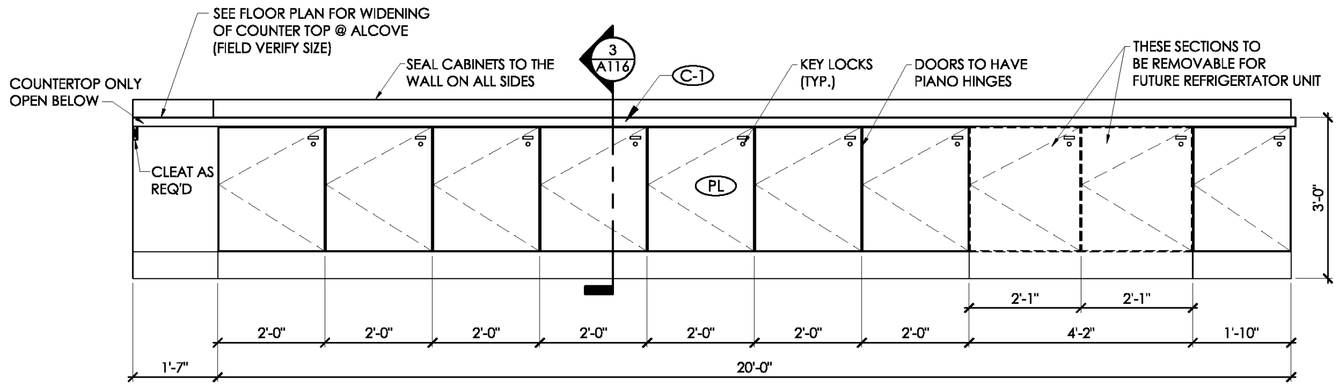

1 A116 ELEVATION REAR SERVING COUNTER/CABINET 1/A100
1/2" = 1'-0"

GENERAL MILLWORK NOTES:

1. SHOP DRAWINGS SHALL BE APPROVED BY THE OWNER PRIOR TO FABRICATION OF MILLWORK.
2. ALL WOOD, GLUE, AND LAMINATES SHALL BE MOISTURE RESISTANT
3. STUD WALL CONSTRUCTION IS BY THE GENERAL CONTRACTOR
4. WILSONART PLASTIC LAMINATE: REFER TO FINISH SCHEDULE FOR COLOR

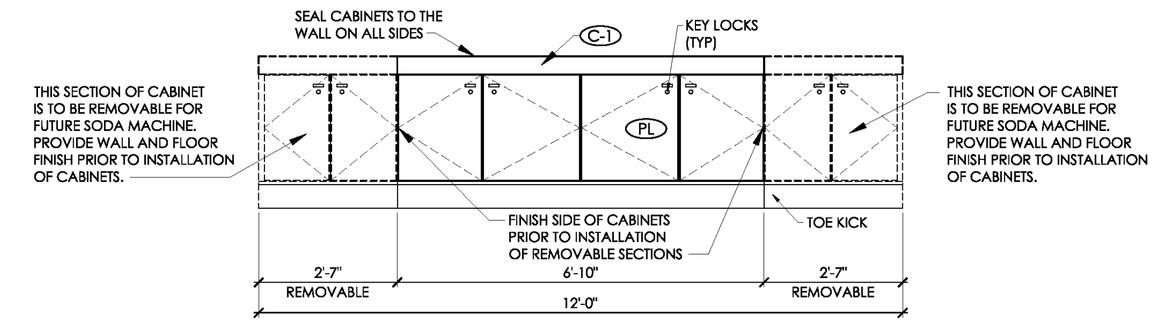

2 A116 ELEVATION DRINK STATION COUNTER/CABINET 1/A100
1/2" = 1'-0"

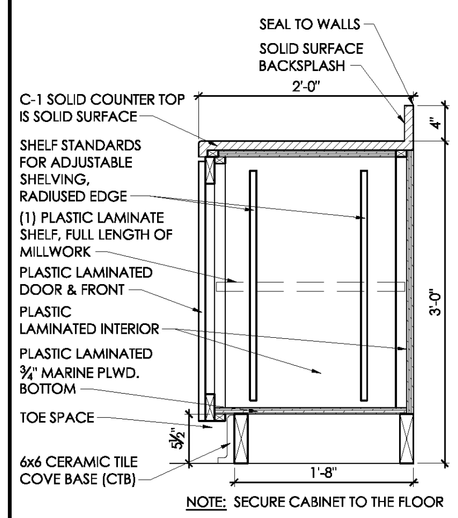

NOTE: SECURE CABINET TO THE FLOOR

3 A116 SECTION @ SERVING COUNTER 1/A100
1" = 1'-0" 1/A116

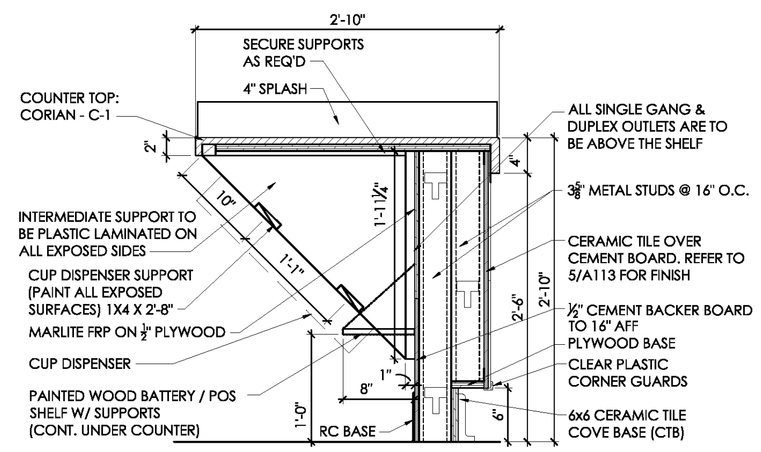

4 A116 SECTION @ CUSTOMER SERVICE COUNTER 1/A100
1" = 1'-0" LOW SECTION 11/A116

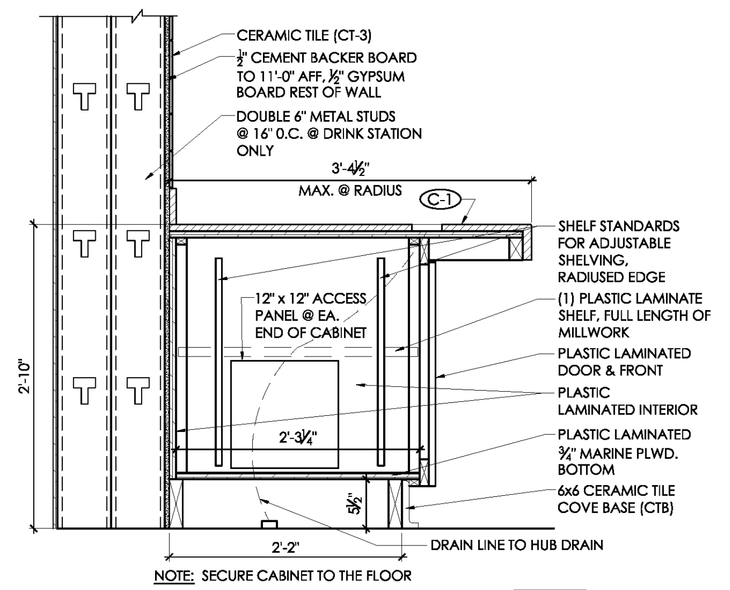

NOTE: SECURE CABINET TO THE FLOOR

5 A116 SECTION @ CONDIMENT COUNTER 1/A100
1" = 1'-0" 2/A116

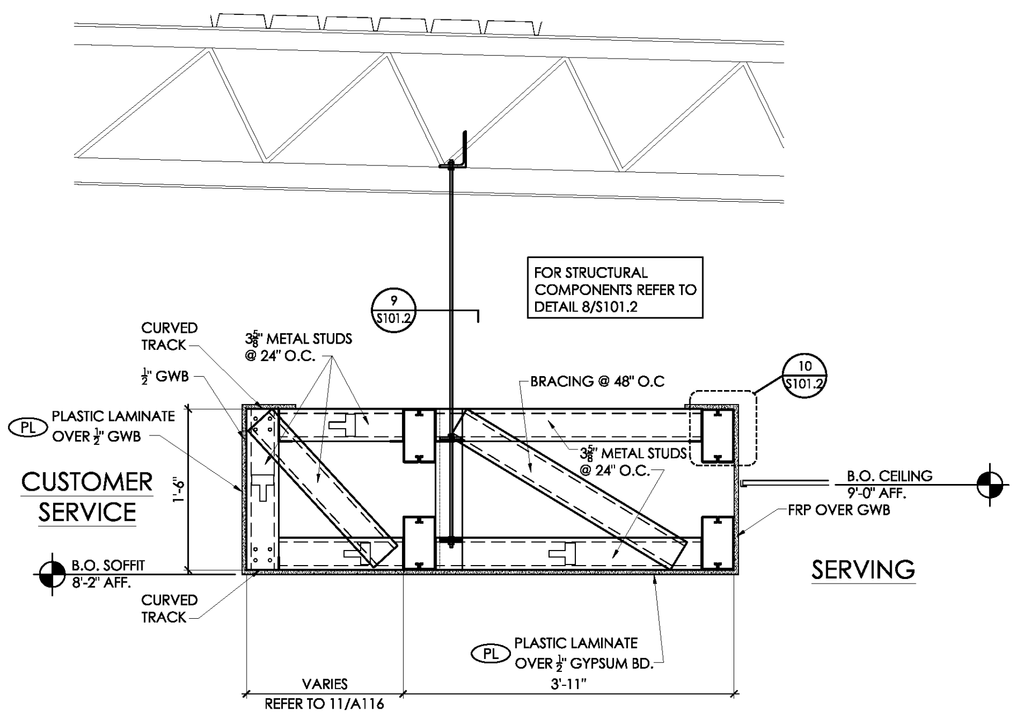

6 A116 SALES COUNTER SOFFIT 1/A103
1" = 1'-0"

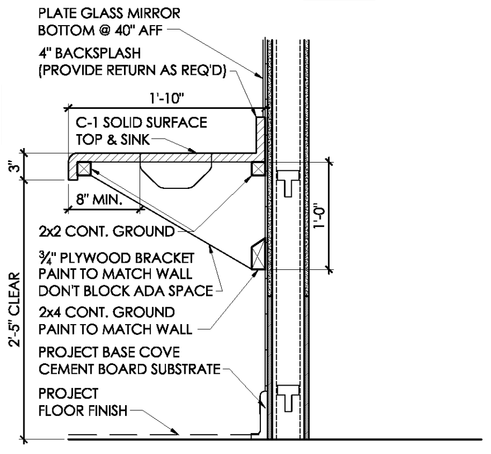

7 A116 SECTION @ LAV./COUNTER 1/A112
1" = 1'-0"

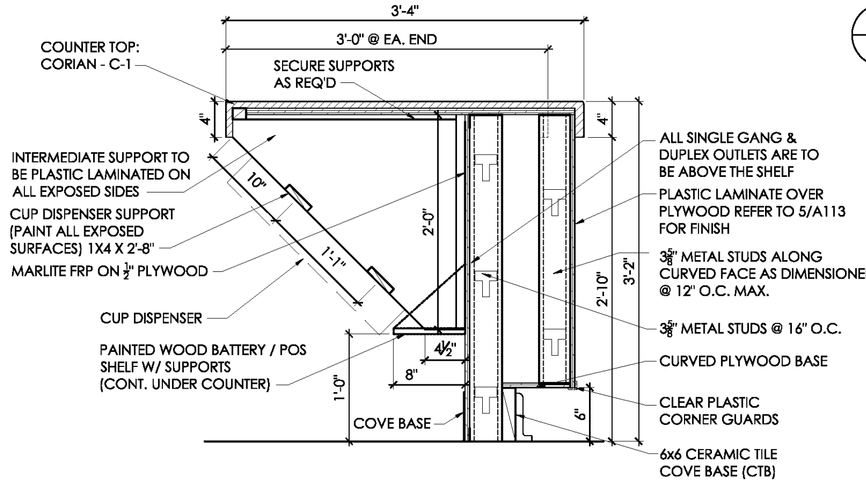

4A A116 SECTION @ CUSTOMER SERVICE COUNTER 1/A100
1" = 1'-0" HIGH SECTION 11/A116

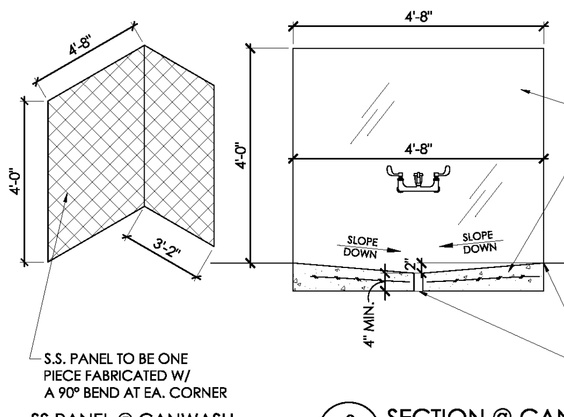

8 A116 SECTION @ CAN WASH 1/A100
1/2" = 1'-0"

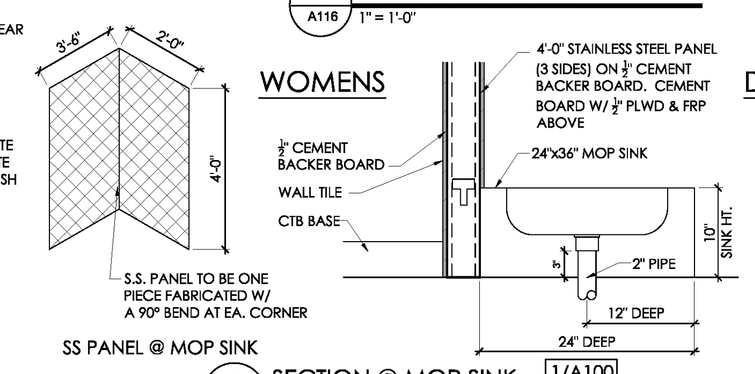

9 A116 SECTION @ MOP SINK 1/A100
1" = 1'-0"

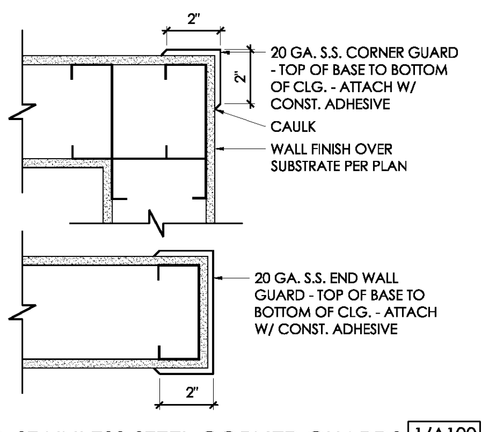

10 A116 STAINLESS STEEL CORNER GUARDS 1/A100
1" = 1'-0"

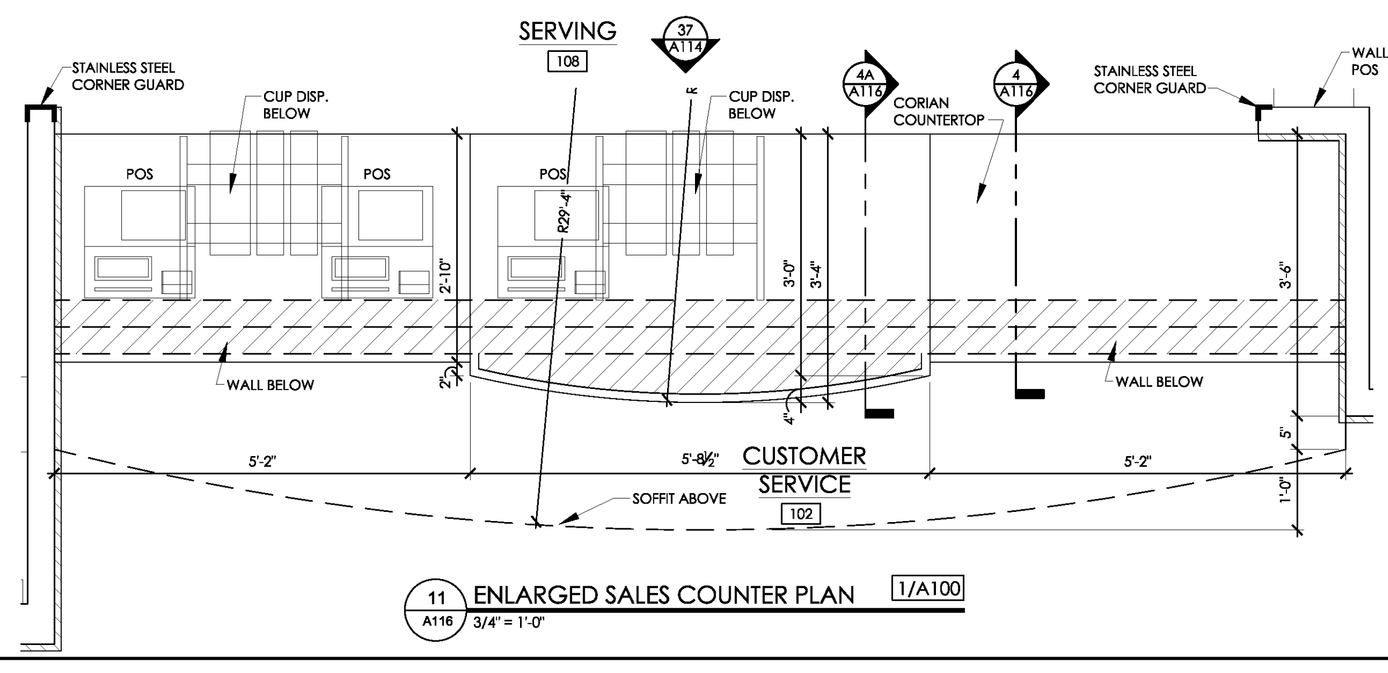

11 A116 ENLARGED SALES COUNTER PLAN 1/A100
3/4" = 1'-0"

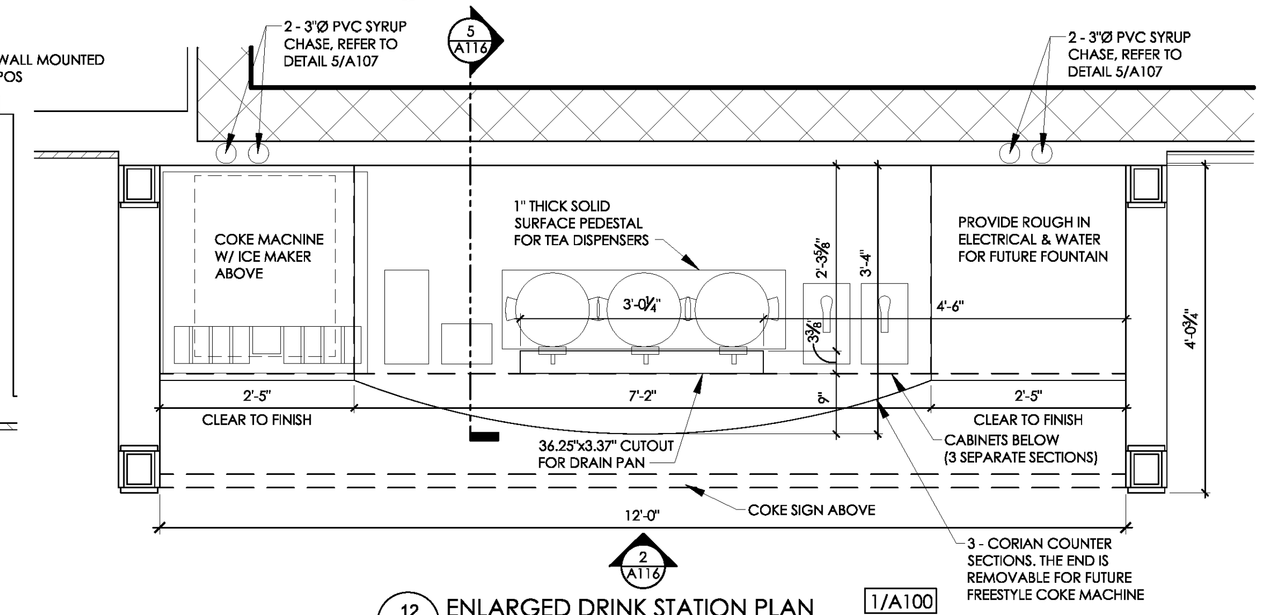

12 A116 ENLARGED DRINK STATION PLAN 1/A100
3/4" = 1'-0"

THESE PLANS ARE THE PROPERTY OF MRP DESIGN GROUP, INC. AND ARE SUBJECT TO FEDERAL COPYRIGHT LAWS. ANY USE OF SAME WITHOUT THE EXPRESS WRITTEN PERMISSION OF MRP DESIGN GROUP, INC. IS STRICTLY PROHIBITED

MRP DESIGN GROUP
3450 Acworth Due West Road
Building 100, Suite 120
Kennesaw, Georgia 30144
P. 678-574-8762
F. 770-917-9470
www.mrpdesign.com

RELEASED FOR CONSTRUCTION

ISSUES/REVISIONS

DATE	DESCRIPTION
4/6/12	PERMIT SET

DRAWN BY: SAB
CHK'D BY: DS
SEAL

PROJECT NAME & ADDRESS

ZAXBY'S®
4210 UNIVERSITY BLVD., SOUTH
JACKSONVILLE, FL 32207

SHEET TITLE

INTERIOR DETAILS

PROJECT NO: 11075

A116

NOTE:
STROEFRONT GLAZING TO BE INPACT GLASS TO MEET COASTAL REQUIREMENTS

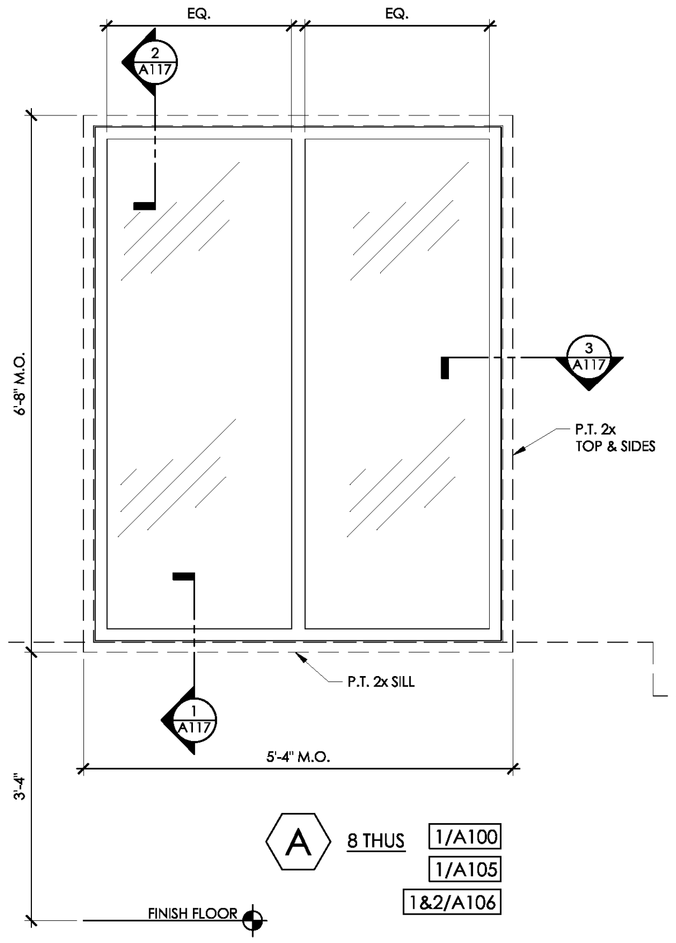

A 8 THUS 1/A100 1/A105 1&2/A106

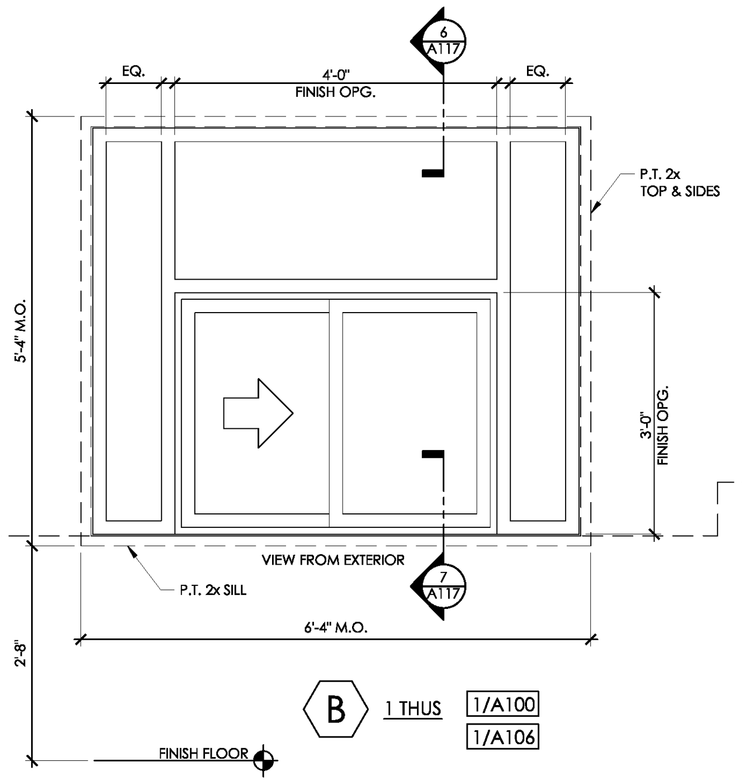

B 1 THUS 1/A100 1/A106

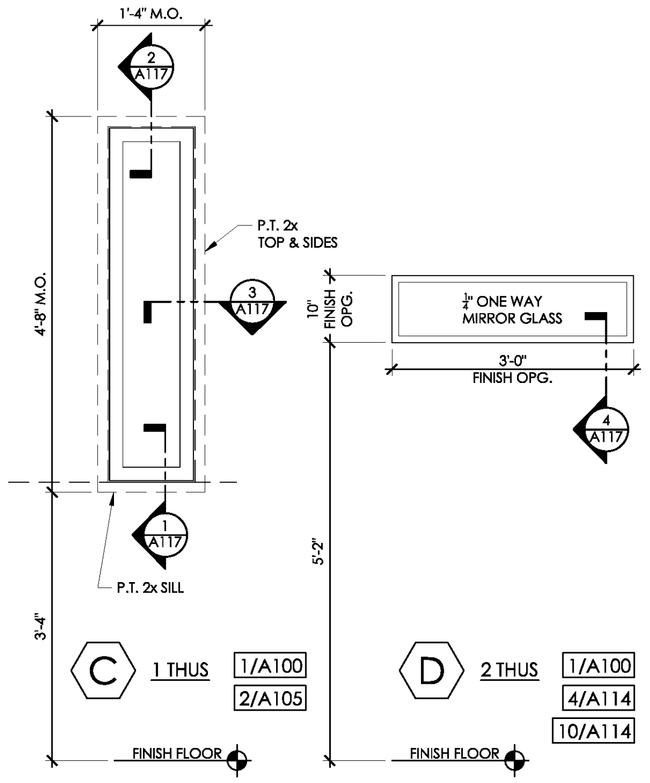

C 1 THUS 1/A100 2/A105

D 2 THUS 1/A100 4/A114 10/A114

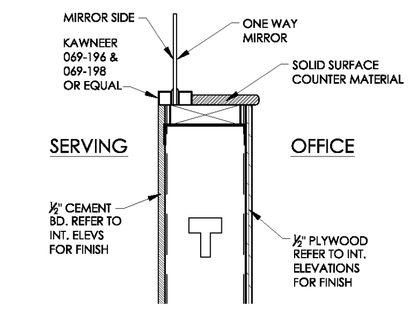

4 A117 DETAIL @ OFFICE WINDOW D/A117
1 1/2" = 1'-0"

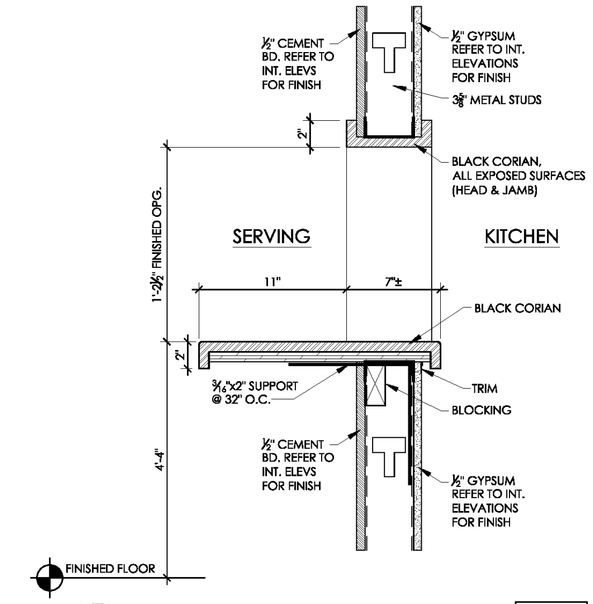

5 A117 DETAIL @ PASS THRU SHELVES 1/A100 4/A114
1 1/2" = 1'-0"

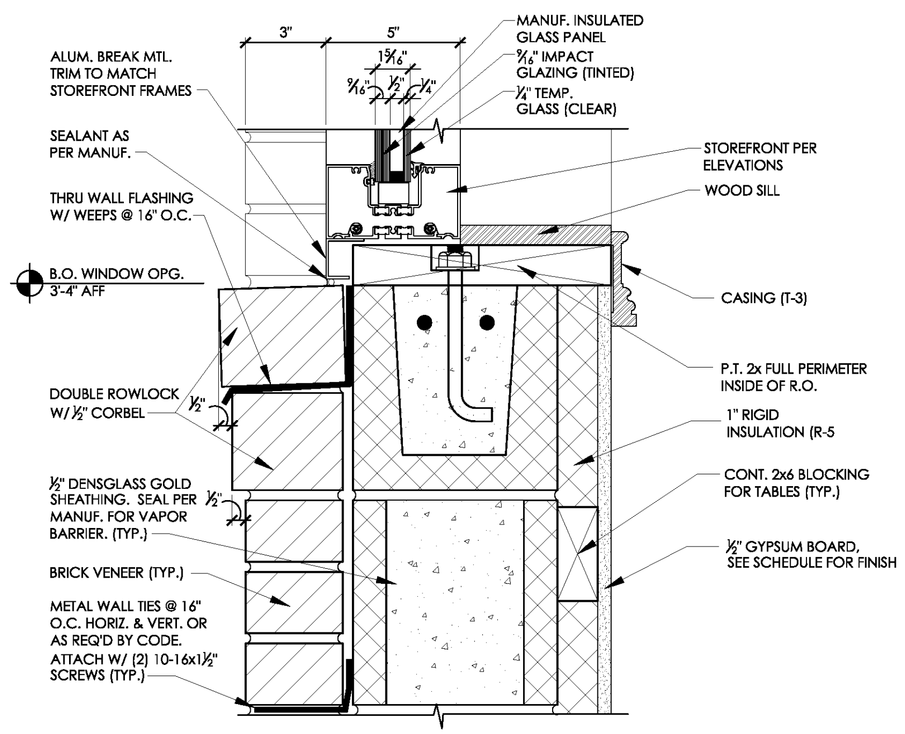

1 A117 DETAIL @ WINDOW SILL 2/A108
3" = 1'-0" A&C/A117

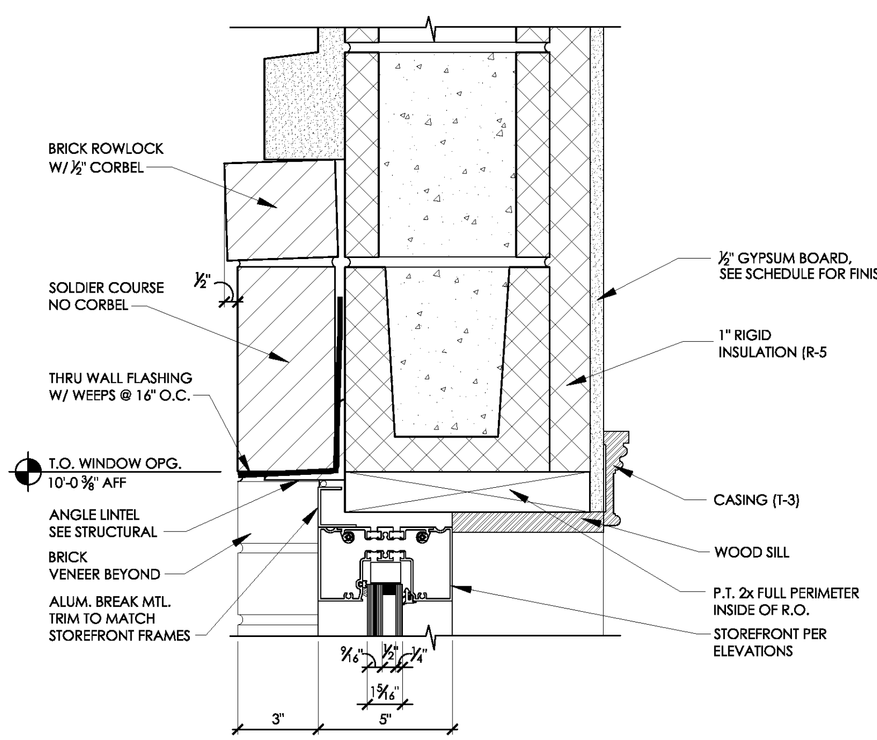

2 A117 DETAIL @ WINDOW HEADER 2/A108
3" = 1'-0" A&C/A117

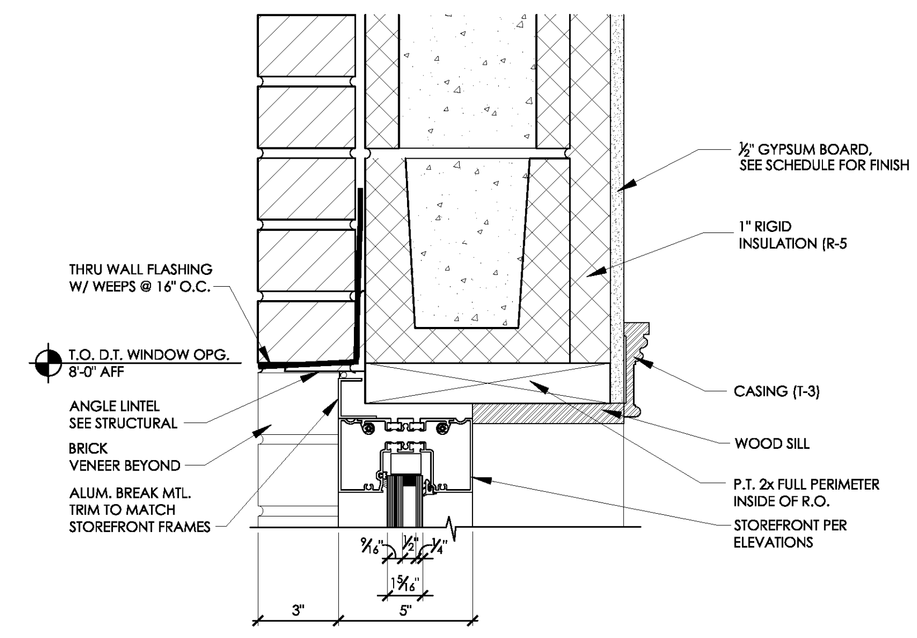

6 A117 DETAIL @ D.T WINDOW HEADER 4/A108
3" = 1'-0" B/A117

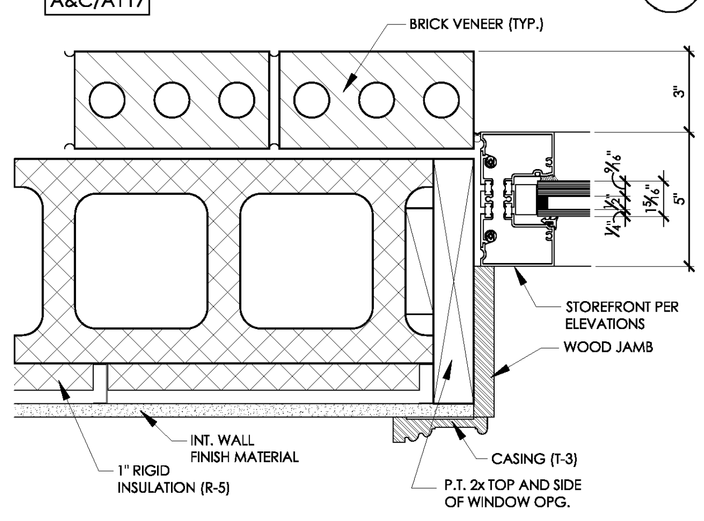

3 A117 DETAIL @ WINDOW JAMB 2/A108
3" = 1'-0" A&C/A117

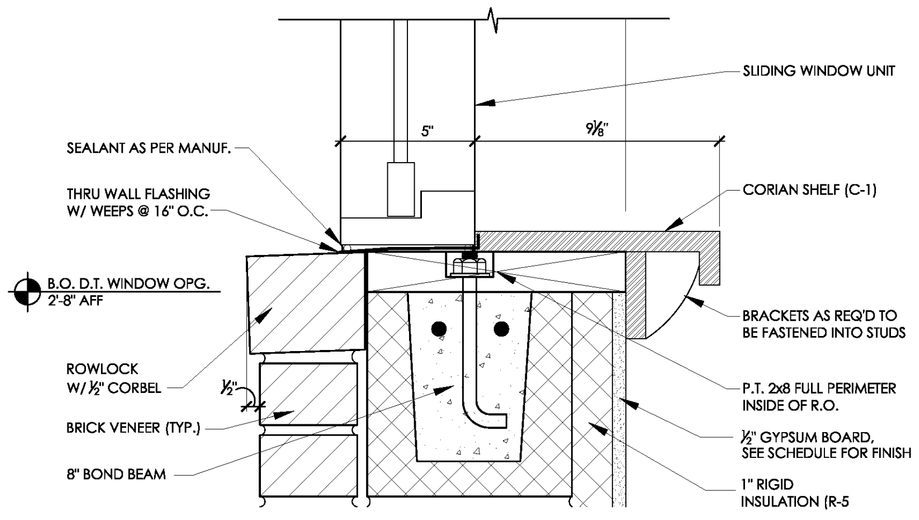

7 A117 DETAIL @ D.T WINDOW HEADER 4/A108
3" = 1'-0" B/A117

MRP DESIGN GROUP
3450 Acworth Due West Road
Building 100, Suite 120
Kennesaw, Georgia 30144
P. 678-574-8762
F. 770-917-9470
www.mrpdesign.com

RELEASED FOR CONSTRUCTION

ISSUES/REVISIONS

DATE	DESCRIPTION
4/6/12	PERMIT SET

DRAWN BY: SAB
CHK'D BY: DS
SEAL

PROJECT NAME & ADDRESS

ZAXBY'S®
4210 UNIVERSITY BLVD., SOUTH
JACKSONVILLE, FL 32207

SHEET TITLE

WINDOW DETAILS

PROJECT NO: 11075

A117

THESE PLANS ARE THE PROPERTY OF MRP DESIGN GROUP, INC. AND ARE SUBJECT TO FEDERAL COPYRIGHT LAWS. ANY USE OF SAME WITHOUT THE EXPRESS WRITTEN PERMISSION OF MRP DESIGN GROUP, INC. IS STRICTLY PROHIBITED

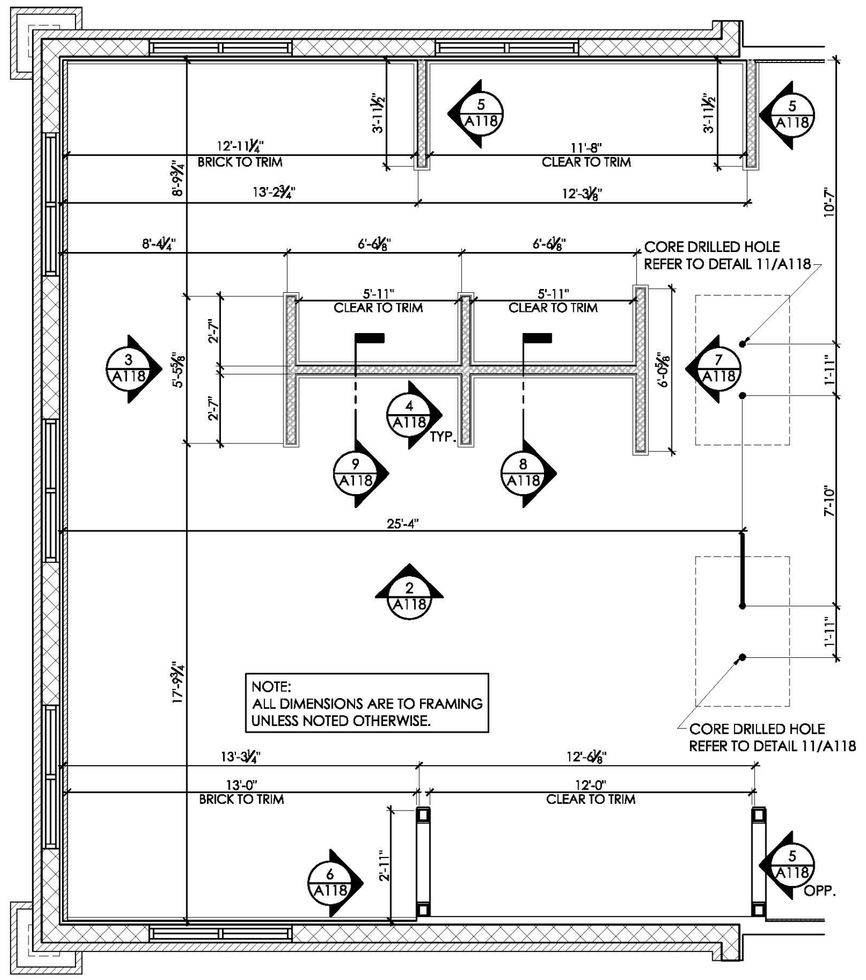

1 A118 LOW WALL KEY PLAN 1/4"= 1'-0"

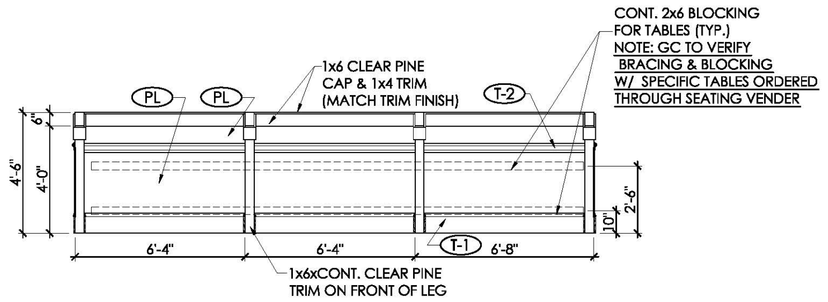

2 A118 LOW WALL ELEVATION 1/A118 1/4"= 1'-0"

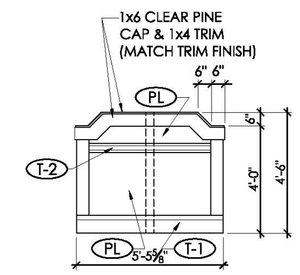

3 A118 LOW WALL ELEVATION 1/A118 1/4"= 1'-0"

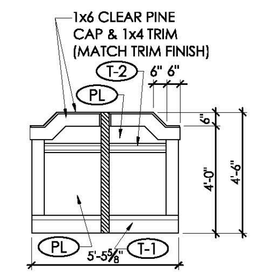

4 A118 LOW WALL ELEVATION 1/A118 1/4"= 1'-0"

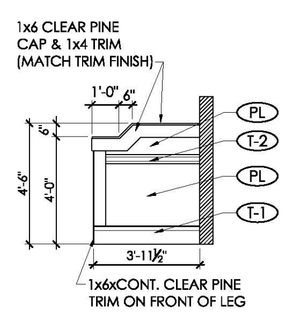

5 A118 LOW WALL DETAIL 1/A118

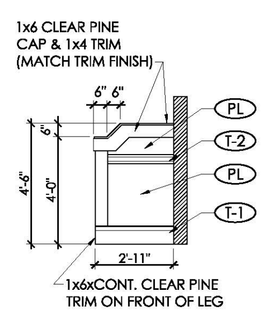

6 A118 LOW WALL DETAIL 1/A118 1/4"= 1'-0"

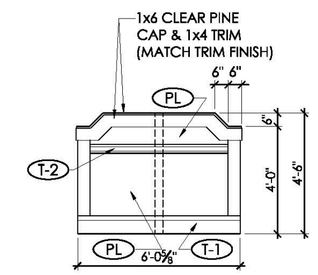

7 A118 LOW WALL ELEVATION 1/A118 1/4"= 1'-0"

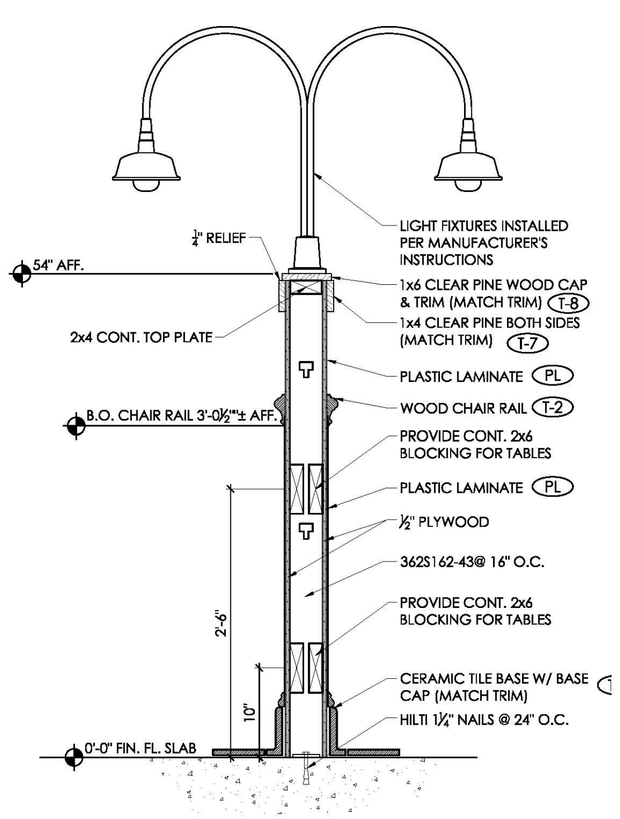

8 A118 LOW WALL SECTION 1/A118 1"= 1'-0"

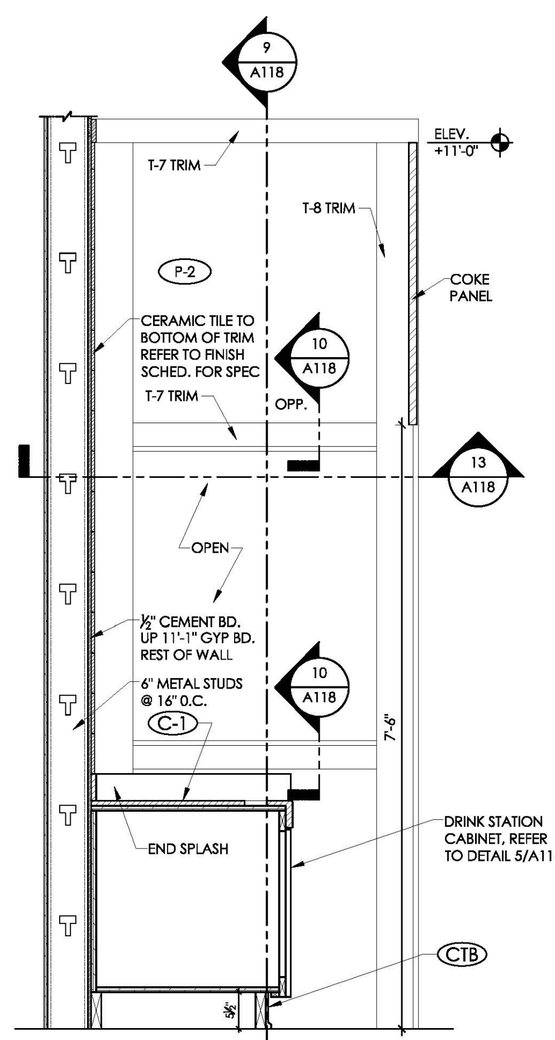

8 A118 SECTION @ DRINK STATION 3/4"= 1'-0"

1/A100
1/A113
1/A118
12/A116

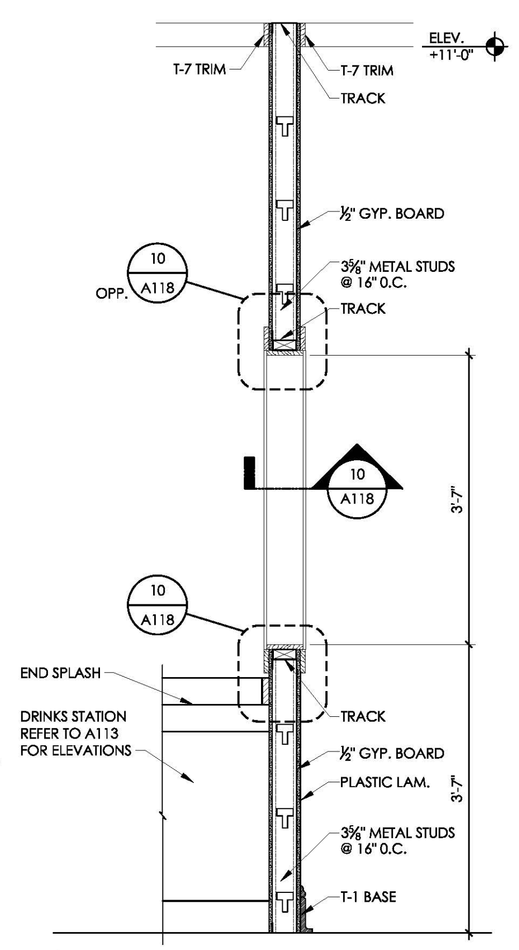

9 A118 SECTION @ DRINK STATION 3/4"= 1'-0" 1/A118

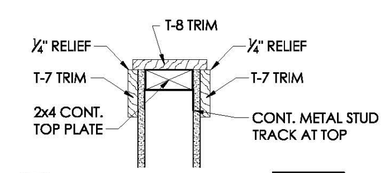

10 A118 TYP. TRIM DETAIL 1/A118 1-1/2"= 1'-0"

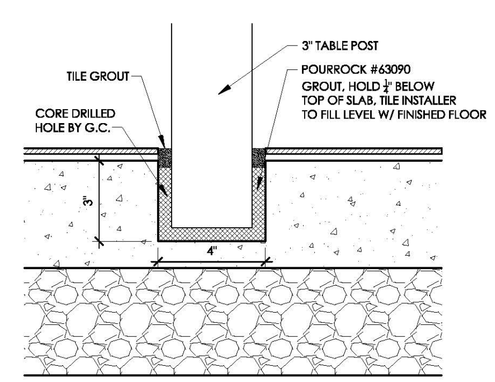

11 A118 TABLE POST DETAIL 1/A118 3"= 1'-0"

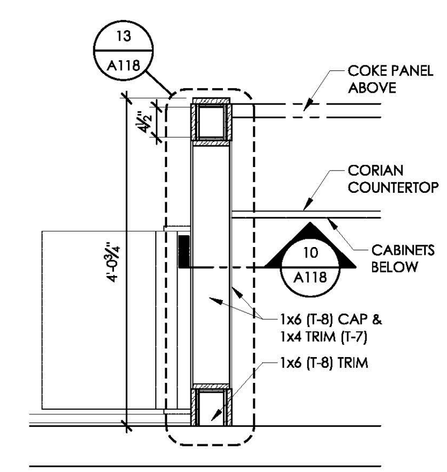

12 A118 DRINK STATION WALL DETAIL 3/4"= 1'-0" 1/A118

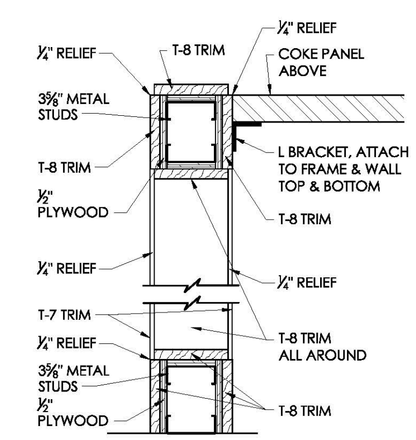

13 A118 TRIM DETAIL @ DRINK STATION 1-1/2"= 1'-0" 1/A118

ROOM FINISH SCHEDULE -CORPORATE INTERIOR

ROOM NAME	RM. NUM.	FLR.	BASE	WALL	WSCOT	HEIGHT	CEILING	HEIGHT	REMARKS
VESTIBULES	100/101	CT-1	T-1	SEE INT ELEV	PL	40"	EXP.	-	REFER TO SHEET A113 FOR INTERIOR ELEVATIONS
CUSTOMER SERVICE	102	CT-1	T-1	SEE INT ELEV	PL	40"	EXP.	-	REFER TO SHEET A113 FOR INTERIOR ELEVATIONS
DINING	103	CT-1	T-1	SEE INT ELEV	PL	40"	EXP.	-	REFER TO SHEET A113 FOR INTERIOR ELEVATIONS
ALCOVE	104	CT-1	T-1	SEE INT ELEV	-	-	EXP.	-	REFER TO SHEET A113 FOR INTERIOR ELEVATIONS
MEN	105	CT-2	CTB	SEE INT ELEV	CT-3	5'-0"	GWB-1	9'-0"	REFER TO SHEET A112 FOR INTERIOR ELEVATIONS
WOMEN	106	CT-2	CTB	SEE INT ELEV	CT-3	5'-0"	GWB-1	9'-0"	REFER TO SHEET A112 FOR INTERIOR ELEVATIONS
DRIVE THRU	107	RC	RC	SEE INT ELEV	-	-	ACT-3	9'-0"	REFER TO DETAIL 2/A101 FOR BASE, & SHEET A114 FOR INT ELEV.
SERVING	108	RC	RC	SEE INT ELEV	-	-	ACT-3	9'-0"	REFER TO DETAIL 2/A101 FOR BASE, & SHEET A114 FOR INT ELEV.
OFFICE	109	RC	RC	SEE INT ELEV	-	-	GWB-1	9'-0"	REFER TO DETAIL 2/A101 FOR BASE, & SHEET A114 FOR INT ELEV.
FOOD PREP	110	RC	RC	SEE INT ELEV	-	-	ACT-3	9'-0"	REFER TO DETAIL 2/A101 FOR BASE, & SHEET A114 FOR INT ELEV.
DISHWASHING	111	RC	RC	SEE INT ELEV	-	-	ACT-3	9'-0"	REFER TO DETAIL 2/A101 FOR BASE, & SHEET A114 FOR INT ELEV.
HALL	112	RC	RC	SEE INT ELEV	-	-	ACT-3	9'-0"	REFER TO DETAIL 2/A101 FOR BASE, & SHEET A114 FOR INT ELEV.
DRY STORAGE	113	RC	RC	FRP	-	-	ACT-3	9'-0"	REFER TO DETAIL 2/A101 FOR BASE, & SHEET A114 FOR INT ELEV.
FREEZER	114	MCP	-	MCP	-	-	MCP	8'-0"	
COOLER	115	RC	RC	MCP	-	-	MCP	8'-0"	
STORAGE CLOSET	116	CT-1	CTB	P-2	-	-	EXP.	-	PAINT ALL EXPOSED MATERIALS ABV. 11'-0" P-3
ADDITIONAL STOR.	117/118	CONC.	-	P-1	-	-	P-1	8'-0"	PLYWOOD WALLS & EXPOSED STRUCTURE. PAINT P-1

*TRIM SHOWN BELOW

FINISH LEGEND

MARK	SURFACE	MANUFACTURER	COLOR	DESCRIPTION
FLOORING				
CT-1	CERAMIC TILE	CREATIVE MATERIAL CORP	TILE: CANYON	18" x 18" - GROUT COLOR: "FLASH WALNUT" H641
CT-2	CERAMIC TILE	CREATIVE MATERIAL CORP	TILE: CANYON	12" x 12" - GROUT COLOR: "FLASH WALNUT" H641
RC	RUBBER COMPOSITION	ECO-GRIP	DARK GREY	ECO-GRIP - 3013 BANK STREET CHARLOTTE NC 28203 (800)-767-5754 CONTACT : Caroline Gailey (cgailey@ecogripeast.com) or Rich Nacle (rnacle@eco-gripfloor.com.)
MCP	METAL COOLER PANEL			BY COOLER MANUFACTURER
CONC.	SEALED CONCRETE	V-SEAL OR EQUAL	CLEAR	INDUSTRA-SEAL 117 FOR SMOOTH FINISHED CONCRETE. STORAGE ROOMS 117 & 118 AND CAN WASH AREA 119.
WALL BASE				
T-1	BASE CAP (RB-163) OVER CERAMIC TILE BASE (CTB)	DARK WALNUT #2716 OR "SPECIAL WALNUT" #924		STAIN THEN COAT W/ CLEAR GLOSS POLYURETHANE
RC	RUBBER COMPOSITION	ECO-GRIP	DARK GREY	ECO-GRIP - 3013 BANK STREET CHARLOTTE NC 28203 (800)-767-5754 CONTACT : Caroline Gailey (cgailey@ecogripeast.com) or Rich Nacle (rnacle@eco-gripfloor.com.)
MCP	METAL COOLER PANEL			BY COOLER MANUFACTURER
PAINT				
P-1	CEILING	SHERWIN WILLIAMS	ZAXBY'S PEARL	ANTIQUE WHITE, EGG-SHELL FINISH, 2 COATS MINIMUM PRIMER: PREPRITE 200
P-2	WALL	SHERWIN WILLIAMS	SW 6374	TORCHLIGHT, SEMI-GLOSS FINISH, 2 COATS MINIMUM PRIMER: USG SHEETROCK FIRST COAT READY MIX
P-3	WALL	SHERWIN WILLIAMS	SW 6258	TRICORN BLACK, SEMI-GLOSS FINISH, 2 COATS MINIMUM
P-4	WALL	SHERWIN WILLIAMS	SW6863	LUSTY RED, SEMI-GLOSS FINISH, 2 COATS MINIMUM
WALL FINISHES				
FRP	FIBERGLASS REINFORCED POLYESTER PANELS	MARLITE	P-118	"NATURAL ALMOND", OUTSIDE CORNERS TO HAVE PVC CORNER GUARDS TO MATCH FRP. USE MARLITE BRAND HARMONIZING MOULDINGS, & C-3/3 ADHESIVE. STORE & INSTALL PER MANUF.
PL	PLASTIC LAMINATE	WILSON ART	NO. 4745-60	"MAROOCHY BRUSH"
EXP	EXPOSED CONSTRUCTION			PAINT SEMI-GLOSS BLACK (P-3)
CT-1	CERAMIC TILE	CREATIVE MATERIAL CORP	TILE: CANYON	18" x 18" - GROUT COLOR: "FLASH WALNUT" H641
CT-3	CERAMIC TILE	CREATIVE MATERIAL CORP	TILE: CMC-RED PEPPER BRIGHT	TILE: 6X2 TILE WITH CUSTOM BRAND "BRIGHT WHITE" #381 GROUT CHECKER TILES WILL BE RANDOMLY PLACED, TO BE PROVIDED BY G.C.
MCP	METAL COOLER PANEL			BY COOLER MANUFACTURER
BRK	THIN BRICK VENEER	CLOVER CREEK BRICK CO. FROM DOUG SALATINO	LINCOLN HERITAGE	THIN BRICK WITH CUSTOM BRAND "HAYSTACK" #380 SANDED GROUT. CEMENT BACKER BOARD SHALL BE PLACED BEHIND ALL INTERIOR BRICK VENEER.
TRIM				
T-1	BASE: BASE CAP (RB-163) OVER CTB	DARK WALNUT #2716 OR "SPECIAL WALNUT" #924		REFER TO DETAIL 17/A115. STAIN THEN COAT W/ CLEAR GLOSS POLYURETHANE
T-2	CHAIR RAIL - (RB-5807)	DARK WALNUT #2716 OR "SPECIAL WALNUT" #924		REFER TO DETAIL 15/A115. STAIN THEN COAT W/ CLEAR GLOSS POLYURETHANE
T-3	CASING - (RB-3)	DARK WALNUT #2716 OR "SPECIAL WALNUT" #924		REFER TO DETAIL 14/A115. STAIN THEN COAT W/ CLEAR GLOSS POLYURETHANE
T-4	CROWN MOULDING - (RB-49)	DARK WALNUT #2716 OR "SPECIAL WALNUT" #924		REFER TO DETAIL 18/A115. STAIN THEN COAT W/ CLEAR GLOSS POLYURETHANE
T-5	CORNER GUARD - (RB-205)	DARK WALNUT #2716 OR "SPECIAL WALNUT" #924		REFER TO DETAIL 16/A115. STAIN THEN COAT W/ CLEAR GLOSS POLYURETHANE
T-6	PICTURE MOLD - (RB-8905)	DARK WALNUT #2716 OR "SPECIAL WALNUT" #924		REFER TO DETAIL 19/A115. STAIN THEN COAT W/ CLEAR GLOSS POLYURETHANE
T-7	1X4 FINISH TRIM.	DARK WALNUT #2716 OR "SPECIAL WALNUT" #924		
T-8	1X6 FINISH TRIM.	DARK WALNUT #2716 OR "SPECIAL WALNUT" #924		
*ALL TRIM TO BE CLEAR PINE, UNLESS OTHERWISE NOTED				
CEILING				
ACT-1	CEILING GRID	ARMSTRONG	WHITE	15/16"
ACT-3	ACCOUSTIC TILE	ARMSTRONG	WHITE	2' x 4', VINYL FACED
MCP	CEILING	COOLER/FREEZER MANUF.		
GWB-1	CEILING		ZAXBY'S PEARL PAINT BY SHERWIN WILLIAMS	5/8" WATERP RESISTANT GYB.BD PRIMER: PREPRITE 200 PAINT: SEMI GLOSS
COUNTERTOP				
C-1		CORIAN	TUMBLEWEED	
C-2		CORIAN	NIGHT SKY	

MRP DESIGN GROUP
3450 Acworth Due West Road
Building 100, Suite 120
Kennesaw, Georgia 30144
P. 678-574-8762
F. 770-917-9470
www.mrpdesign.com

RELEASED FOR CONSTRUCTION

ISSUES/REVISIONS

DATE	DESCRIPTION
4/6/12	PERMIT SET

DRAWN BY: SAB

CHK'D BY: DS

SEAL

PROJECT NAME & ADDRESS

ZAXBY'S®
4210 UNIVERSITY BLVD., SOUTH
JACKSONVILLE, FL 32207

SHEET TITLE

LOW WALL DETAILS

PROJECT NO: 11075

A118

THESE PLANS ARE THE PROPERTY OF MRP DESIGN GROUP, INC. AND ARE SUBJECT TO FEDERAL COPYRIGHT LAWS. ANY USE OF SAME WITHOUT THE EXPRESS WRITTEN PERMISSION OF MRP DESIGN GROUP, INC. IS STRICTLY PROHIBITED